MASSACHUSETTS DEPARTMENT OF TRANSPORTATION
HIGHWAY DIVISION

MAYNARD & ACTON
ASSABET RIVER RAIL TRAIL

STATE	FED. AID PROJ. NO.	SHEET NO.	TOTAL SHEETS
MA	CMAQ/STP-TE-002S(836)	1	230
PROJECT FILE NO.	604531		

TITLE SHEET & INDEX

PLAN AND PROFILE OF

ASSABET RIVER RAIL TRAIL

(BRIDGE NOS. M-10-012, A-02-034 & A-02-042)

IN THE TOWNS OF

MAYNARD & ACTON

MIDDLESEX COUNTY

CMAQ/STP-TE-002S(836)

THE MASSACHUSETTS HIGHWAY DEPARTMENT STANDARD SPECIFICATIONS FOR HIGHWAYS AND BRIDGES DATED 1988, AS AMENDED, THE SUPPLEMENTAL SPECIFICATIONS DATED JULY 1, 2015, THE 2014 CONSTRUCTION STANDARD DETAILS, THE 1990 STANDARD DRAWINGS FOR SIGNS AND SUPPORTS, THE 1996 CONSTRUCTION AND TRAFFIC STANDARD DETAILS, (AS RELATED TO TRAFFIC STANDARD DETAILS ONLY), THE LATEST MANUAL ON UNIFORM TRAFFIC CONTROL DEVICES FOR STREETS AND HIGHWAYS WITH MASSACHUSETTS AMENDMENTS,THE 1968 STANDARD DRAWINGS FOR TRAFFIC SIGNALS AND HIGHWAY LIGHTING, THE 2012 AASHTO GUIDE FOR THE DEVELOPMENT OF BICYCLE FACILITIES, AND THE LATEST EDITION OF THE AMERICAN STANDARD FOR NURSERY STOCK, WILL GOVERN.

INDEX

SHEET NO.	DESCRIPTION
1	TITLE SHEET & INDEX
2	LEGEND & ABBREVIATIONS
3	KEY PLAN & BORING LOCATIONS
4-7	BORING LOGS
8-13	TYPICAL SECTIONS
14-30	CONSTRUCTION BASELINE TIES
31-66	CONSTRUCTION PLANS & PROFILES
67-76	CURB TIE & GRADING PLANS
77-97	TRAFFIC SIGN & PAVEMENT MARKING PLANS
98-99	TRAFFIC SIGN SUMMARY SHEET
100-103	TEMPORARY TRAFFIC CONTROL PLANS
104-105	LIGHTING DETAILS
106-122	LANDSCAPING PLANS AND DETAILS
123-125	WETLAND REPLICATION PLANS
126-132	CONSTRUCTION DETAILS
133-135	WHEELCHAIR RAMP/DRIVEWAY DETAILS
136-137	RETAINING WALL DETAILS
138-160	BRIDGE PLANS
161-230	CROSS SECTIONS

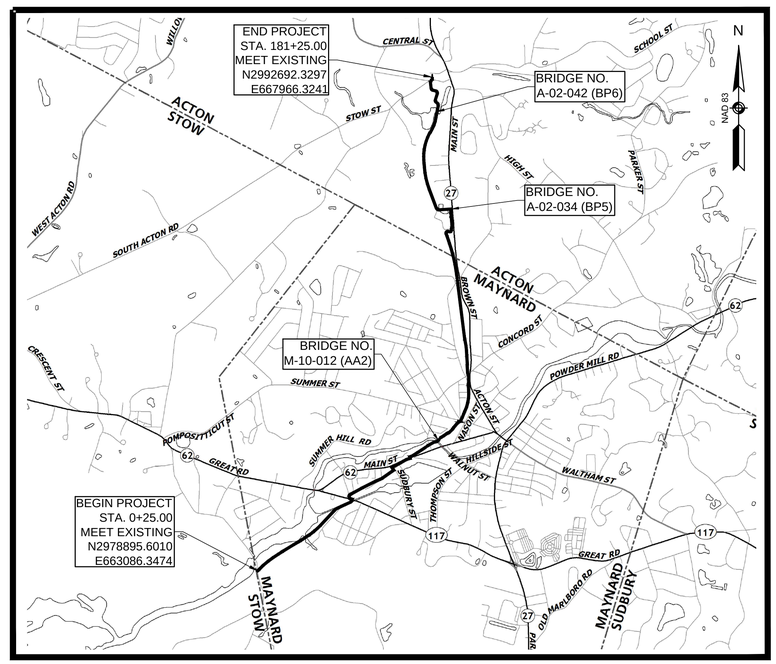

0 2000 4000 5000 6000

SCALE: 1" = 2000'

LENGTH OF PROJECT = 18,100 FEET = 3.428 MILES

TRAIL DESIGN DESIGNATION

DESIGN SPEED	18 MPH (12 MPH IN CONSTRAINED AREAS)
MINIMUM HORIZONTAL CURVE RADIUS	60' (27' IN CONSTRAINED AREAS)
MINIMUM LENGTH OF CREST VERTICAL CURVE	100'
MAXIMUM GRADE FOR LEVEL TERRAIN	4.5%

GPI Greenman-Pedersen, Inc.
Engineering and Construction Services
181 Ballardvale Street, Suite 202, Wilmington, MA 01887
Tel: (978) 570-2999 Fax: (978) 658-3044
http://www.gpinet.com
Other Offices In: FL, MD, MI, NH, NJ, NY, OH, PA, VA, VT, WA

DATE	DESCRIPTION	REV #

massDOT
Massachusetts Department of Transportation
Highway Division

RECOMMENDED FOR APPROVAL

CHIEF ENGINEER DATE

DEPARTMENT OF TRANSPORTATION
FEDERAL HIGHWAY ADMINISTRATION

APPROVED:

DIVISION ADMINISTRATOR DATE

APPROVED

HIGHWAY ADMINISTRATOR DATE

604531_HD(CS&LE).DWG Plotted on 8-Oct-2015 12:52 PM

LANDSCAPE DETAILS
SEE SHEET 114

TIMBER RAIL FENCE
NONE

HIGHWAY GUARD DETAILS
NONE

WATER SUPPLY ALTERATIONS
NONE

DRAINAGE DETAILS
SEE BELOW

MAYNARD & ACTON
ASSABET RIVER RAIL TRAIL

STATE	FED. AID PROJ. NO.	SHEET NO.	TOTAL SHEETS
MA	CMAQ/STP-TE-002S(836)	50	230
PROJECT FILE NO. 604531			

CONSTRUCTION PLAN & PROFILE

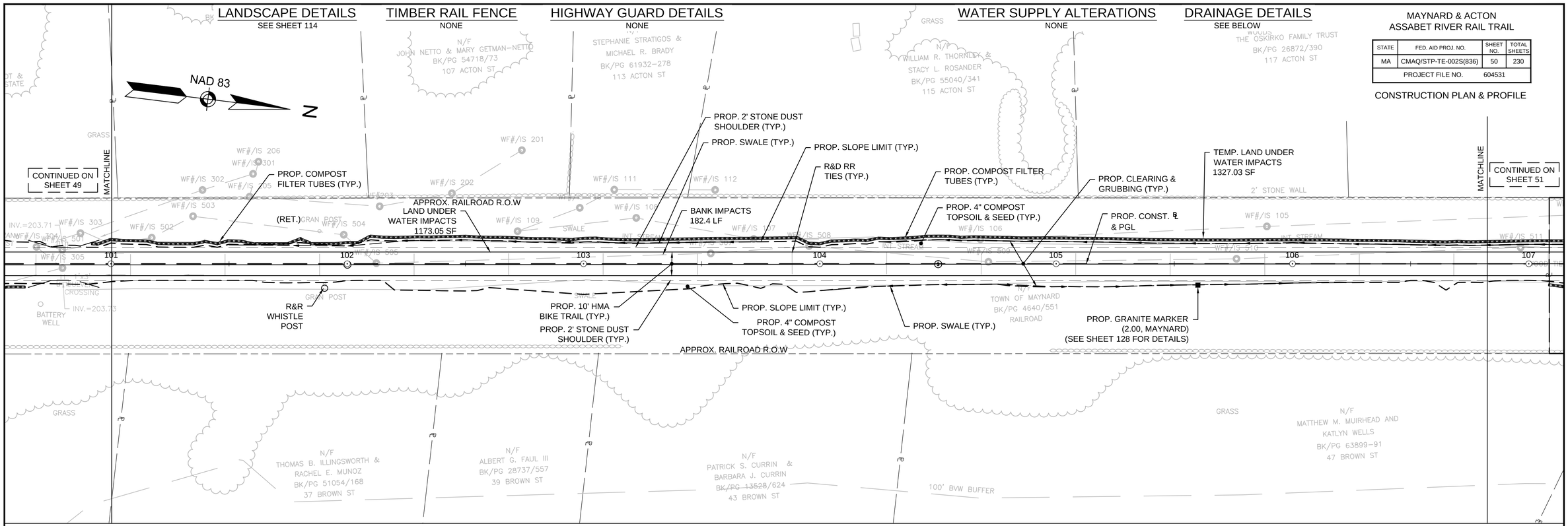

HOR. SCALE IN FEET
20 0 20 40
4 0 4 8
VER. SCALE IN FEET

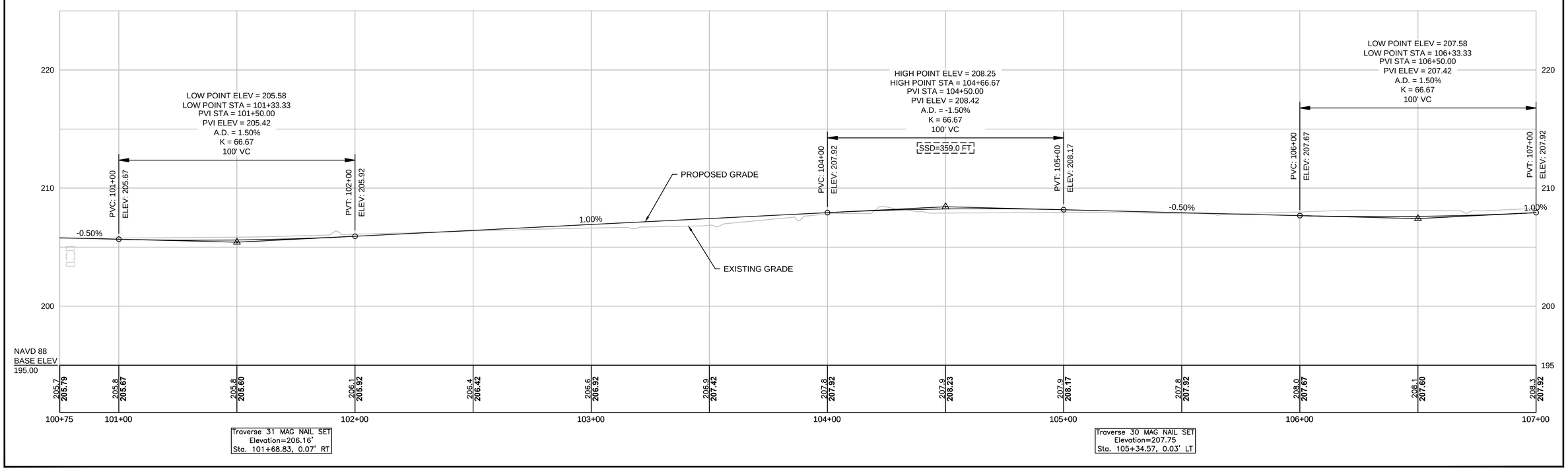

604531_HD(CO).DWG Plotted on 8-Oct-2015 1:10 PM

LANDSCAPE DETAILS
SEE SHEET 114

TIMBER RAIL FENCE
(SEE SHEET 127 FOR DETAILS)
STA. 90+50 LT TO STA. 95+25 LT
STA. 100+65 RT TO STA. 100+95 RT
STA. 100+65 LT TO STA. 100+95 LT

HIGHWAY GUARD DETAILS
NONE

WATER SUPPLY ALTERATIONS
NONE

DRAINAGE DETAILS
SEE BELOW

MAYNARD & ACTON
ASSABET RIVER RAIL TRAIL

STATE	FED. AID PROJ. NO.	SHEET NO.	TOTAL SHEETS
MA	CMAQ/STP-TE-002S(836)	49	230
PROJECT FILE NO.	604531		

CONSTRUCTION PLAN & PROFILE

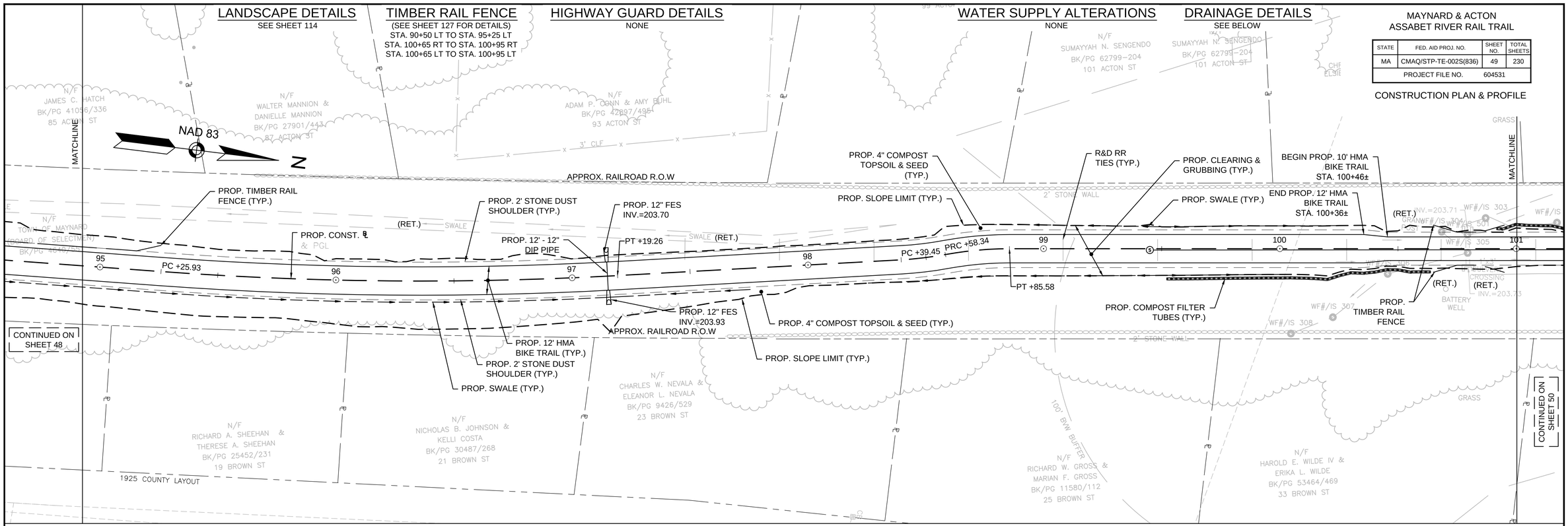

HOR. SCALE IN FEET
20 0 20 40
4 0 4 8
VER. SCALE IN FEET

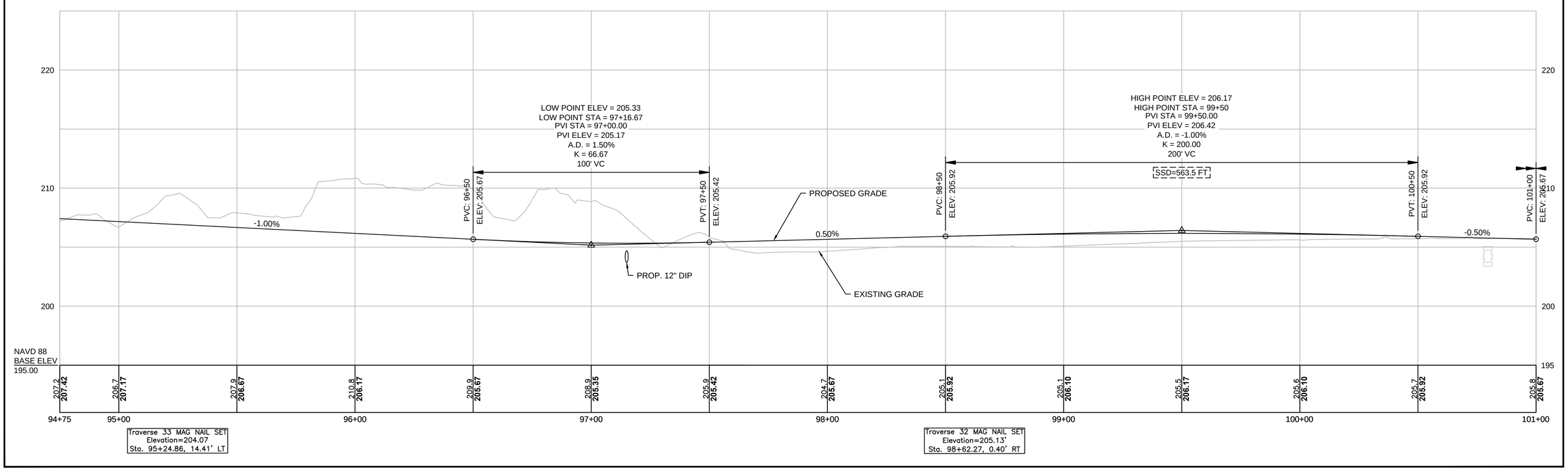

604531_HD(CO).DWG Plotted on 8-Oct-2015 1:10 PM

LANDSCAPE DETAILS
SEE SHEET 113

TIMBER RAIL FENCE
(SEE SHEET 127 FOR DETAILS)
STA. 90+50 LT TO STA. 95+25 LT

HIGHWAY GUARD DETAILS
NONE

WATER SUPPLY ALTERATIONS
NONE

DRAINAGE DETAILS
SEE BELOW

MAYNARD & ACTON
ASSABET RIVER RAIL TRAIL

STATE	FED. AID PROJ. NO.	SHEET NO.	TOTAL SHEETS
MA	CMAQ/STP-TE-002S(836)	48	230
PROJECT FILE NO.	604531		

CONSTRUCTION PLAN & PROFILE

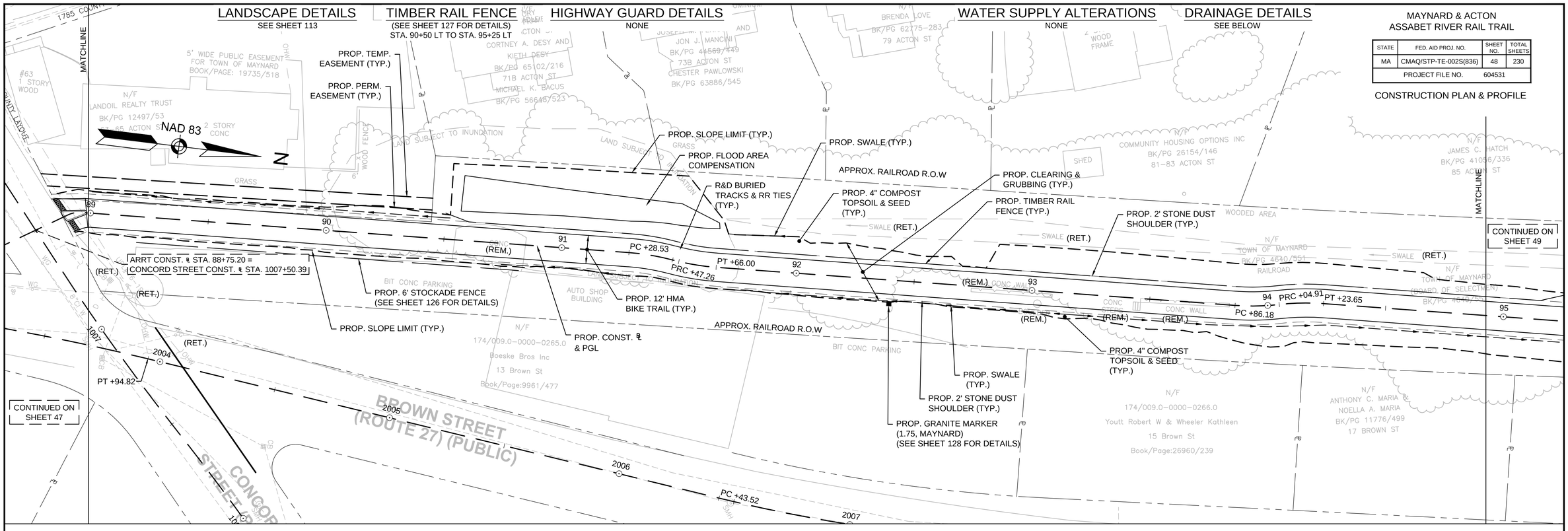

HOR. SCALE IN FEET
20 0 20 40
4 0 4 8
VER. SCALE IN FEET

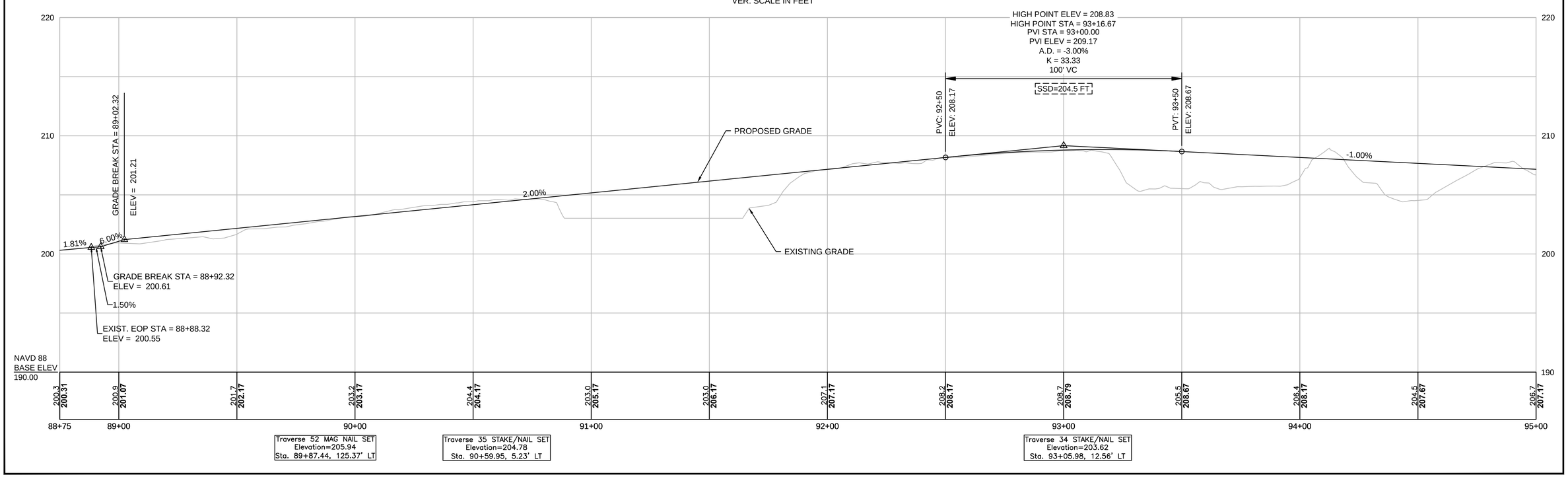

604531_HD(CO).DWG Plotted on 8-Oct-2015 1:09 PM

LANDSCAPE DETAILS
SEE SHEET 113

TIMBER RAIL FENCE
(SEE SHEET 127 FOR DETAILS)
STA. 86+34 RT TO STA. 88+41 RT
STA. 89+20 RT TO STA. 90+82 RT

HIGHWAY GUARD DETAILS
NONE

WATER SUPPLY ALTERATIONS
NONE

DRAINAGE DETAILS
SEE BELOW

MAYNARD & ACTON
ASSABET RIVER RAIL TRAIL

STATE	FED. AID PROJ. NO.	SHEET NO.	TOTAL SHEETS
MA	CMAQ/STP-TE-002S(836)	47	230
PROJECT FILE NO.	604531		

CONSTRUCTION PLAN & PROFILE

DRAINAGE STRUCTURE TABLE

NAME	STATION	OFFSET	RIM	INCOMING PIPES	OUTGOING PIPES	REMARKS
EX-CB-10	88+01	1.6' RT	200.39		I=194.96' (CBCI-7)	CIT
CBCI-11	87+99	10.7' RT	193.23		I=194.79' (EX-CB)	CONN. TO EXIST.

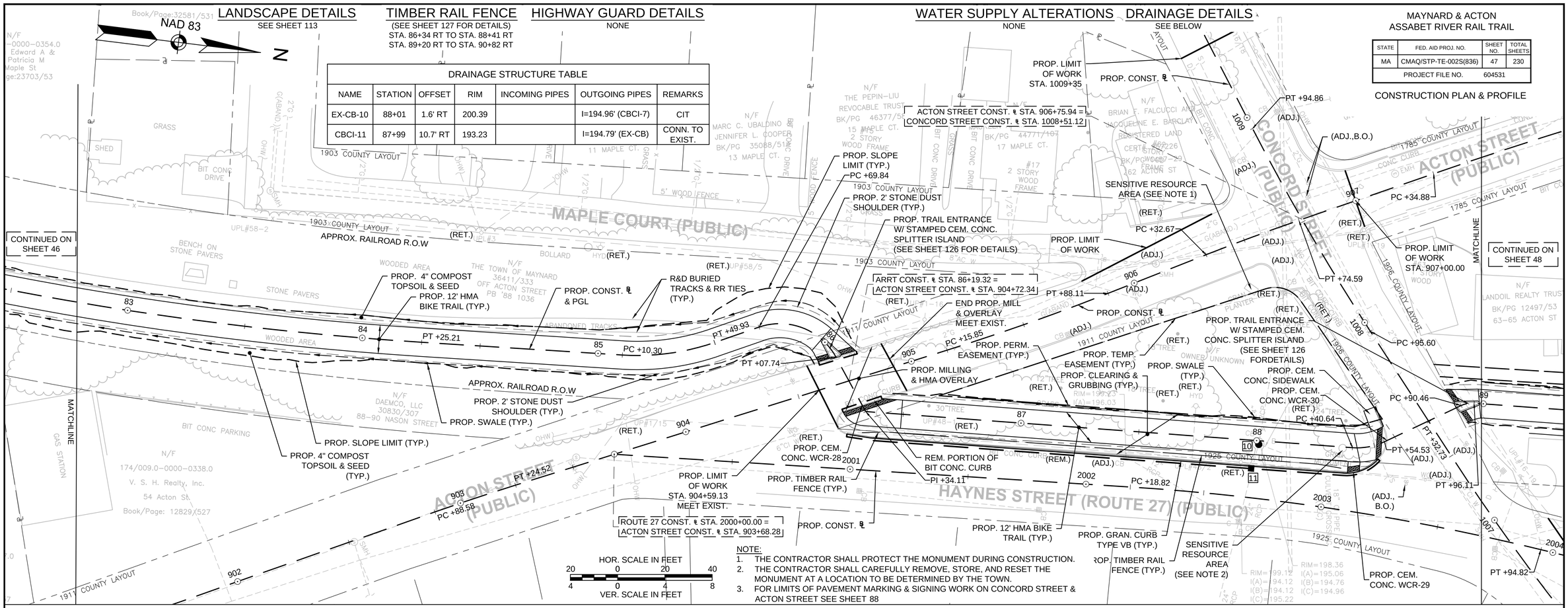

NOTE:
1. THE CONTRACTOR SHALL PROTECT THE MONUMENT DURING CONSTRUCTION.
2. THE CONTRACTOR SHALL CAREFULLY REMOVE, STORE, AND RESET THE MONUMENT AT A LOCATION TO BE DETERMINED BY THE TOWN.
3. FOR LIMITS OF PAVEMENT MARKING & SIGNING WORK ON CONCORD STREET & ACTON STREET SEE SHEET 88

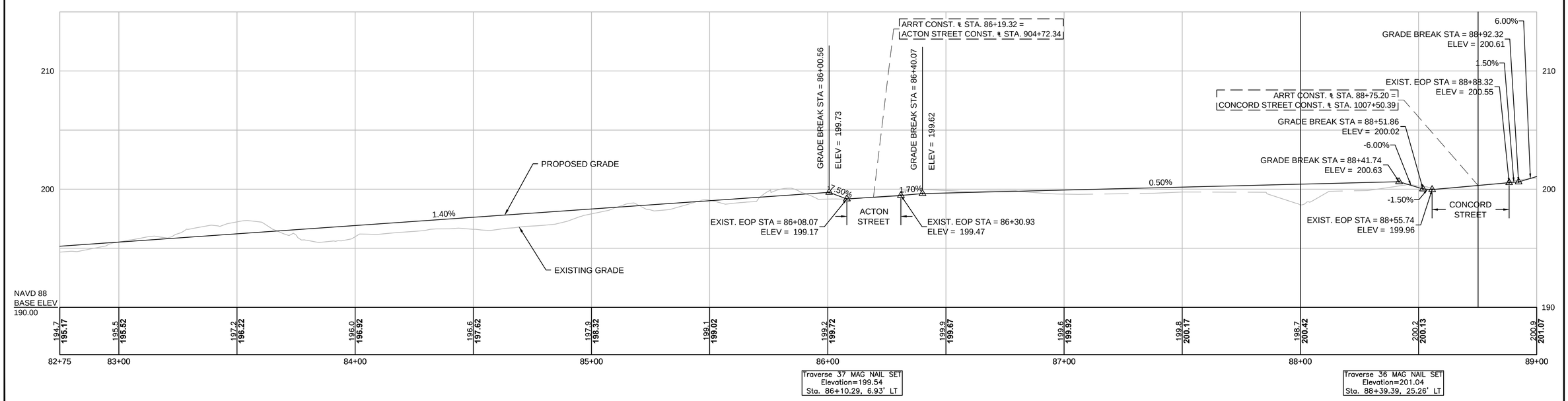

604531_HD(CO).DWG Plotted on 8-Oct-2015 1:09 PM

LANDSCAPE DETAILS
SEE SHEET 112

TIMBER RAIL FENCE
NONE

HIGHWAY GUARD DETAILS
NONE

WATER SUPPLY ALTERATIONS
NONE

DRAINAGE DETAILS
SEE BELOW

MAYNARD & ACTON
ASSABET RIVER RAIL TRAIL

STATE	FED. AID PROJ. NO.	SHEET NO.	TOTAL SHEETS
MA	CMAQ/STP-TE-002S(836)	46	230
PROJECT FILE NO.	604531		

CONSTRUCTION PLAN & PROFILE

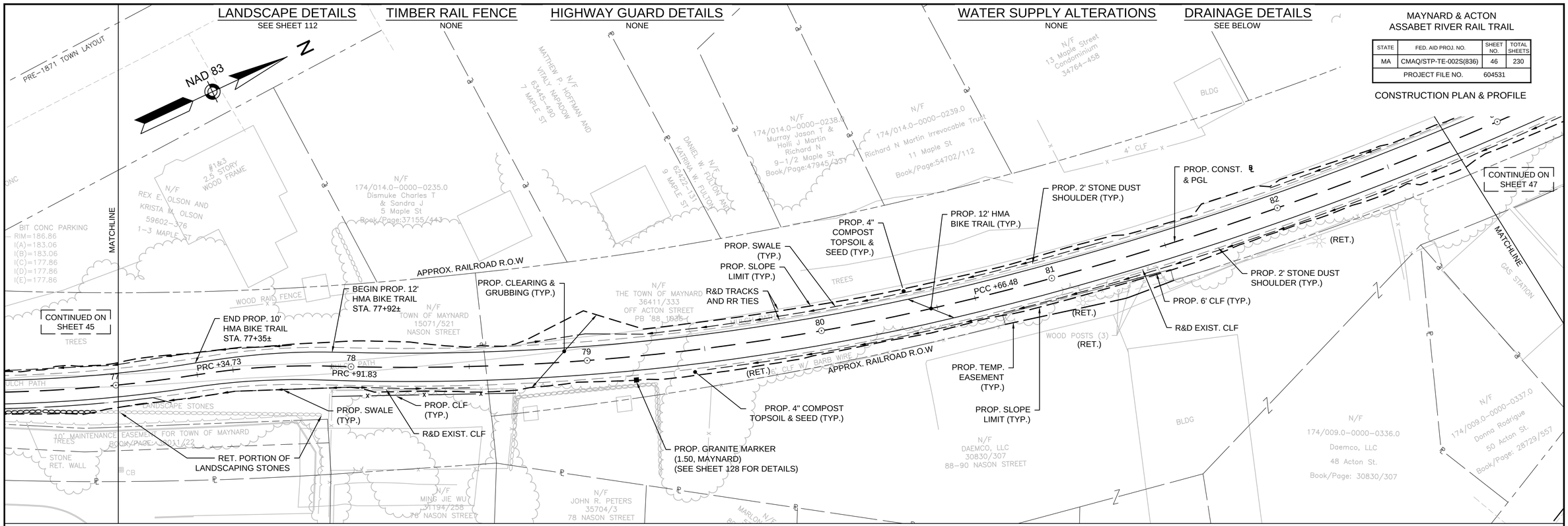

HOR. SCALE IN FEET
20 0 20 40
4 0 4 8
VER. SCALE IN FEET

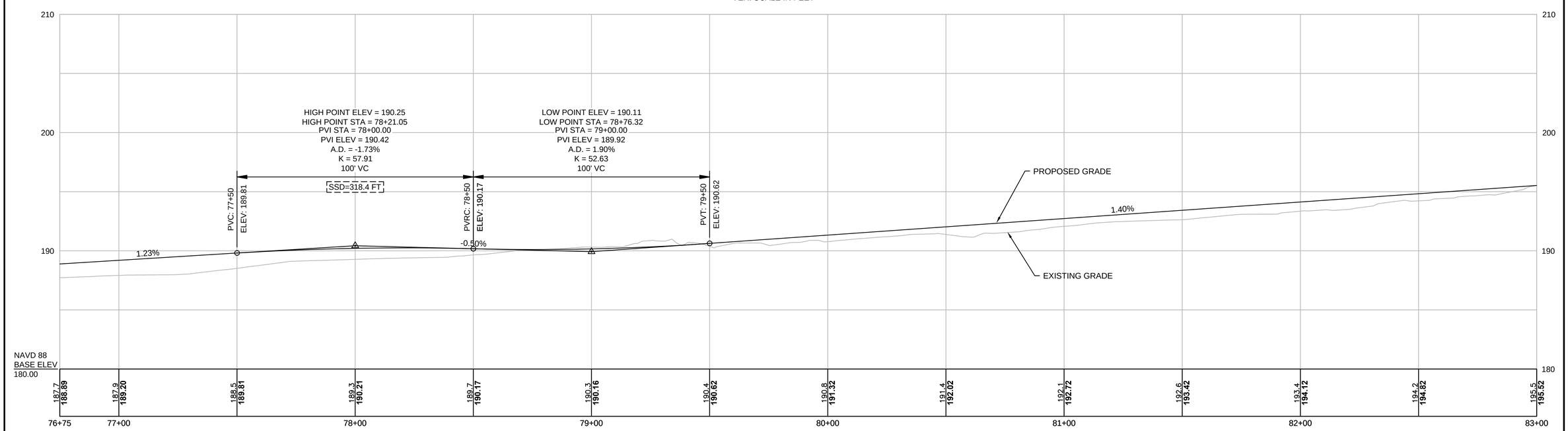

604531_HD(CO).DWG Plotted on 8-Oct-2015 1:08 PM

MAYNARD & ACTON
ASSABET RIVER RAIL TRAIL

STATE	FED. AID PROJ. NO.	SHEET NO.	TOTAL SHEETS
MA	CMAQ/STP-TE-002S(836)	45	230
PROJECT FILE NO.	604531		

CONSTRUCTION PLAN & PROFILE

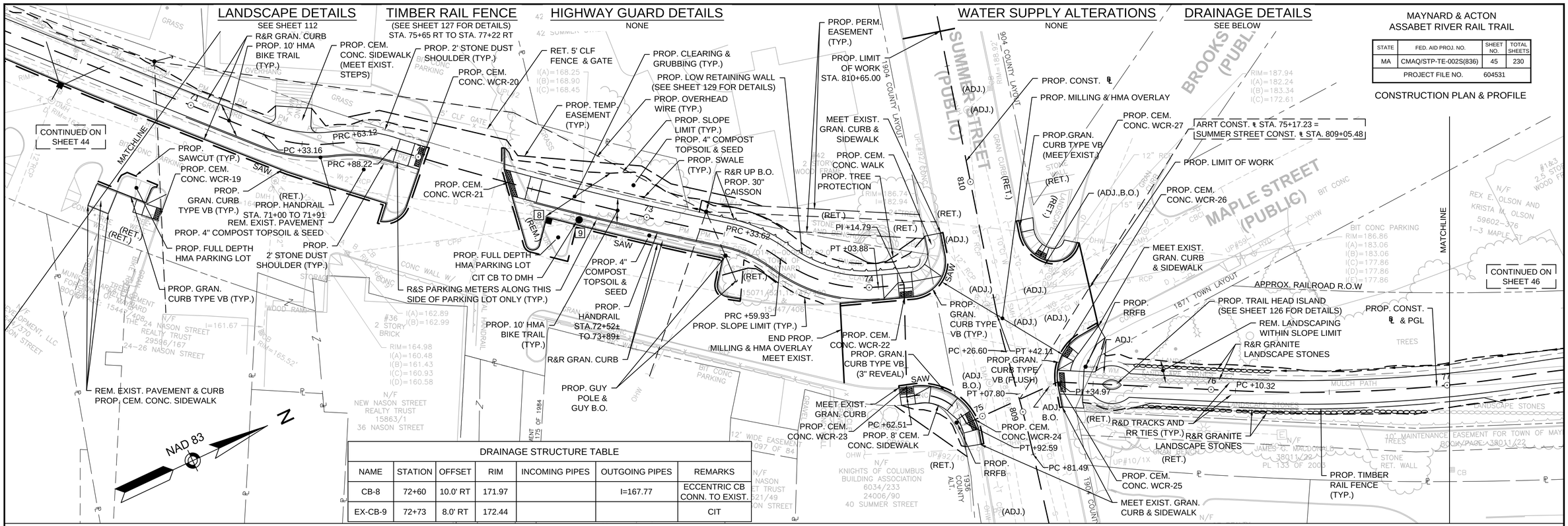

DRAINAGE STRUCTURE TABLE						
NAME	STATION	OFFSET	RIM	INCOMING PIPES	OUTGOING PIPES	REMARKS
CB-8	72+60	10.0' RT	171.97		I=167.77	ECCENTRIC CB CONN. TO EXIST.
EX-CB-9	72+73	8.0' RT	172.44			CIT

NOTE:
1. FOR LIMITS OF WORK ON SUMMER STREET SEE SHEET 86

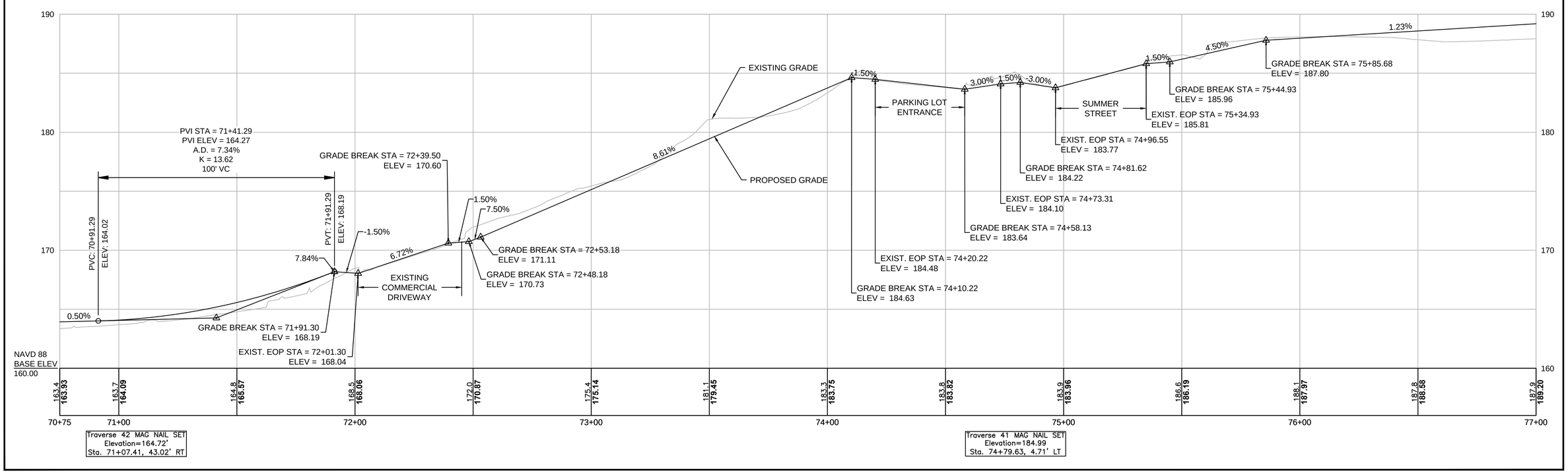

604531_HD(CO).DWG Plotted on 8-Oct-2015 1:07 PM

LANDSCAPE DETAILS
SEE SHEET 111

TIMBER RAIL FENCE
STA. 68+31 RT TO STA. 68+48 RT

HIGHWAY GUARD DETAILS
NONE

WATER SUPPLY ALTERATIONS
NONE

DRAINAGE DETAILS
SEE BELOW

MAYNARD & ACTON
ASSABET RIVER RAIL TRAIL

STATE	FED. AID PROJ. NO.	SHEET NO.	TOTAL SHEETS
MA	CMAQ/STP-TE-002S(836)	44	230
PROJECT FILE NO.	604531		

CONSTRUCTION PLAN & PROFILE

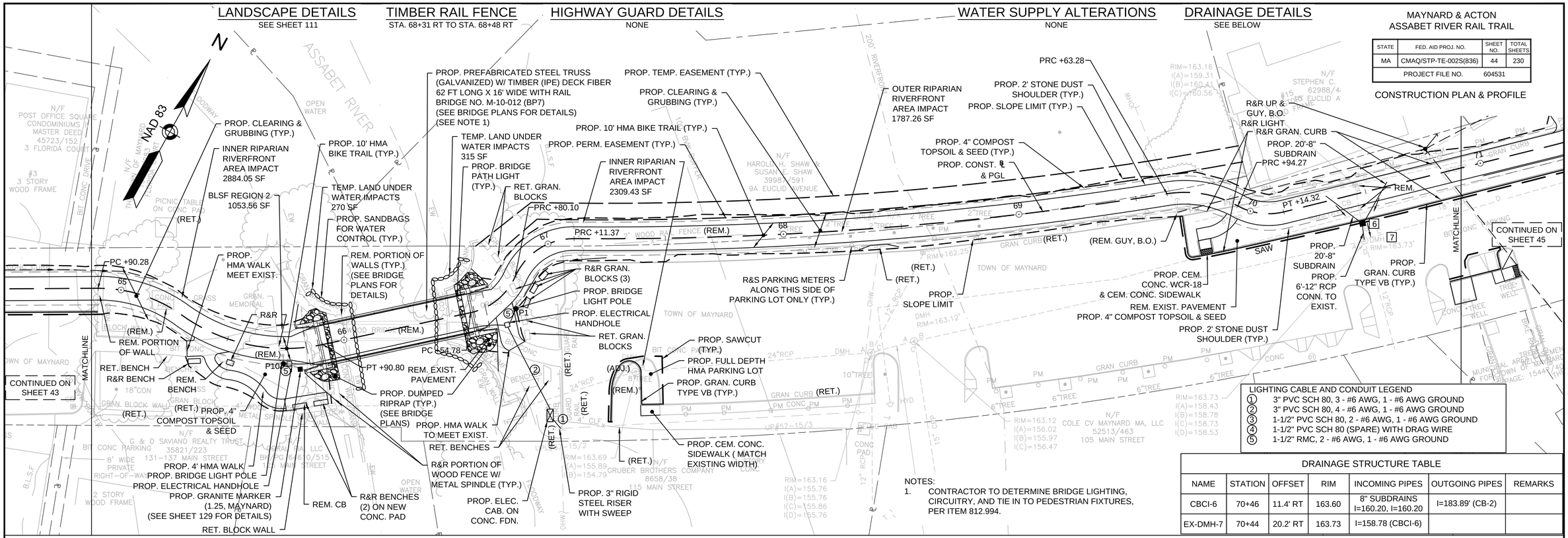

LIGHTING CABLE AND CONDUIT LEGEND

1. 3" PVC SCH 80, 3 - #6 AWG, 1 - #6 AWG GROUND
2. 3" PVC SCH 80, 4 - #6 AWG, 1 - #6 AWG GROUND
3. 1-1/2" PVC SCH 80, 2 - #6 AWG, 1 - #6 AWG GROUND
4. 1-1/2" PVC SCH 80 (SPARE) WITH DRAG WIRE
5. 1-1/2" RMC, 2 - #6 AWG, 1 - #6 AWG GROUND

DRAINAGE STRUCTURE TABLE

NAME	STATION	OFFSET	RIM	INCOMING PIPES	OUTGOING PIPES	REMARKS
CBCI-6	70+46	11.4' RT	163.60	8" SUBDRAINS I=160.20, I=160.20	I=183.89' (CB-2)	
EX-DMH-7	70+44	20.2' RT	163.73	I=158.78 (CBCI-6)		

NOTES:
1. CONTRACTOR TO DETERMINE BRIDGE LIGHTING, CIRCUITRY, AND TIE IN TO PEDESTRIAN FIXTURES, PER ITEM 812.994.

HOR. SCALE IN FEET
20 0 20 40
4 0 4 8
VER. SCALE IN FEET

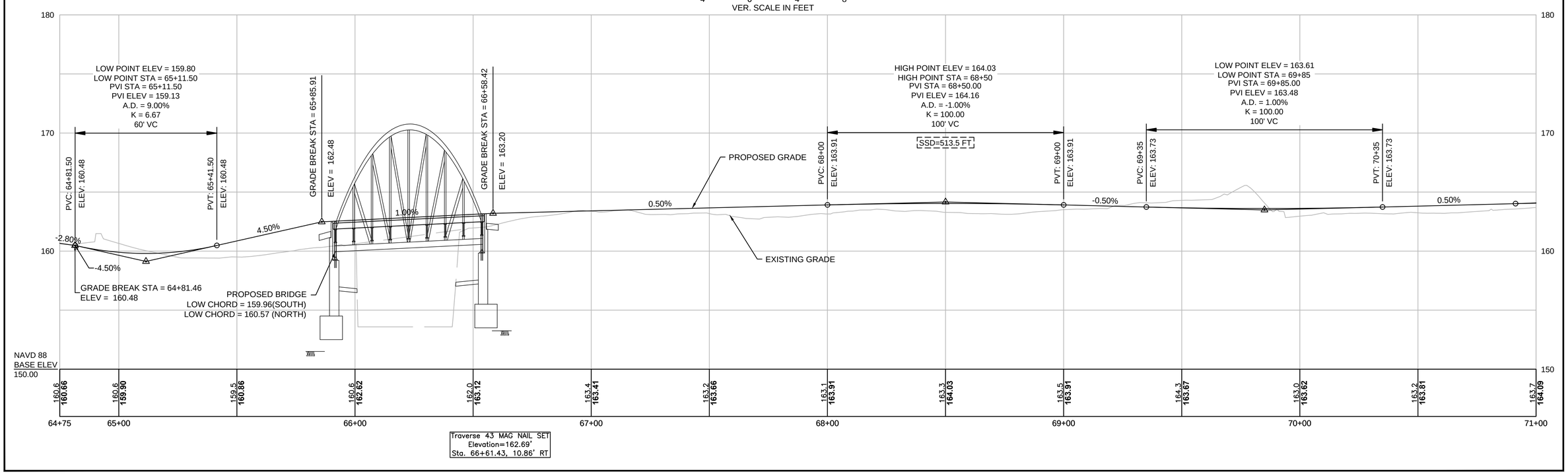

Traverse 43 MAG NAIL SET
Elevation=162.69'
Sta. 66+61.43, 10.86' RT

604531_HD(CO).DWG Plotted on 8-Oct-2015 1:07 PM

LANDSCAPE DETAILS
SEE SHEET 111

TIMBER RAIL FENCE
(SEE SHEET 127 FOR DETAILS)
STA. 57+54 RT TO STA. 59+41 RT (4-RAIL)
STA. 57+40 LT TO STA. 59+45 LT
STA. 59+49 LT TO STA. 60+33 LT
STA. 60+38 LT TO STA. 62+95 LT (4-RAIL)
STA. 62+09 RT TO STA. 62+56 RT

HIGHWAY GUARD DETAILS
NONE

WATER SUPPLY ALTERATIONS
NONE

DRAINAGE DETAILS
SEE BELOW

MAYNARD & ACTON
ASSABET RIVER RAIL TRAIL

STATE	FED. AID PROJ. NO.	SHEET NO.	TOTAL SHEETS
MA	CMAQ/STP-TE-002S(836)	43	230
PROJECT FILE NO.	604531		

CONSTRUCTION PLAN & PROFILE

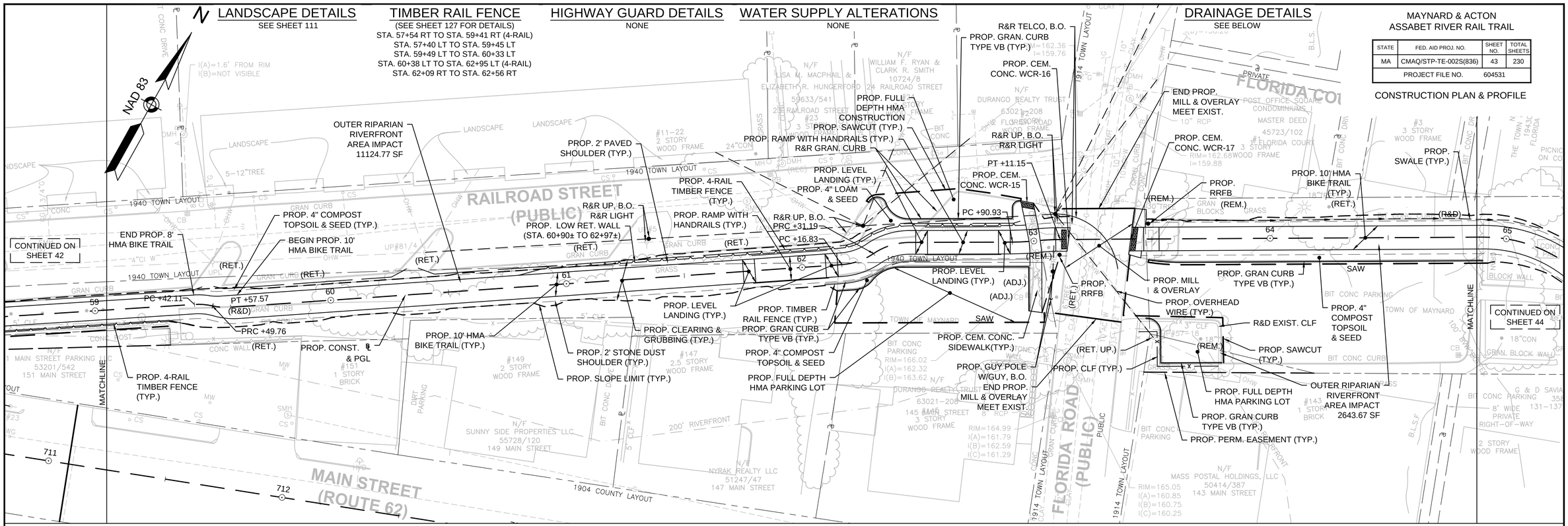

NOTE:
1. FOR LIMITS OF WORK ON FLORIDA ROAD SEE SHEET 84

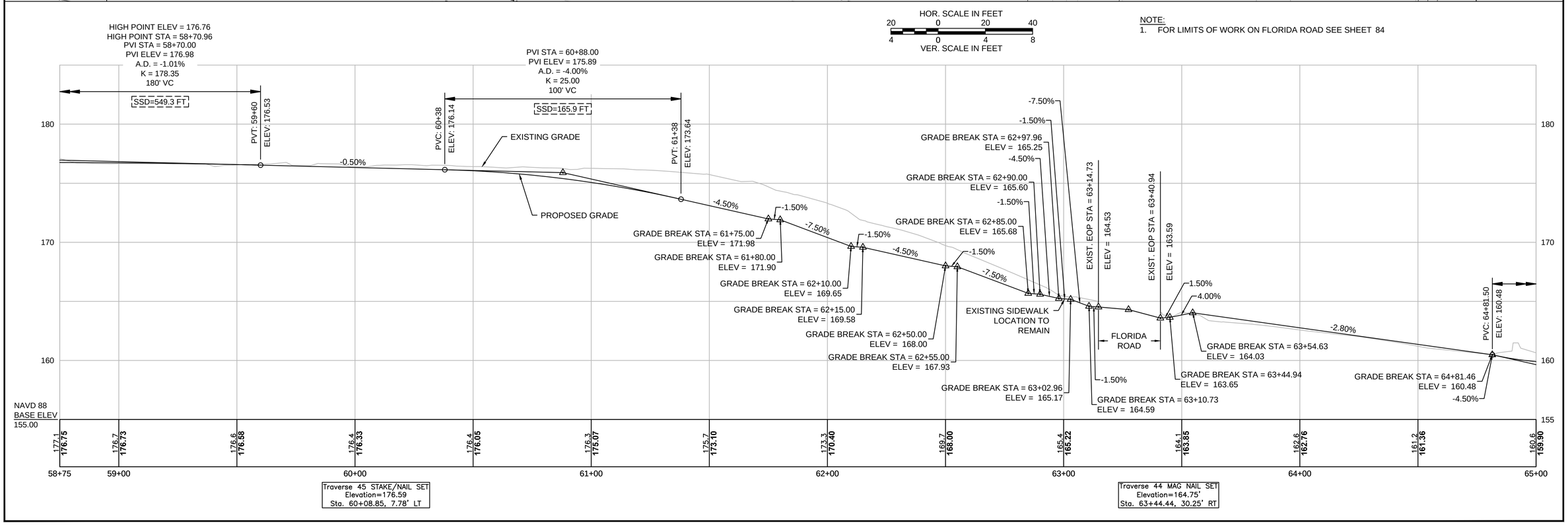

604531_HD(CO).DWG Plotted on 8-Oct-2015 1:06 PM

MAYNARD & ACTON
ASSABET RIVER RAIL TRAIL

STATE	FED. AID PROJ. NO.	SHEET NO.	TOTAL SHEETS
MA	CMAQ/STP-TE-002S(836)	42	230
PROJECT FILE NO.	604531		

CONSTRUCTION PLAN & PROFILE

LANDSCAPE DETAILS
SEE SHEET 110

TIMBER RAIL FENCE
(SEE SHEET 127 FOR DETAILS)
STA. 53+50 RT TO STA. 56+37 RT
STA. 57+40 LT TO STA. 59+45 LT
STA. 57+54 RT TO STA. 59+41 RT (4-RAIL)

HIGHWAY GUARD DETAILS
NONE

WATER SUPPLY ALTERATIONS
NONE

DRAINAGE DETAILS
SEE BELOW

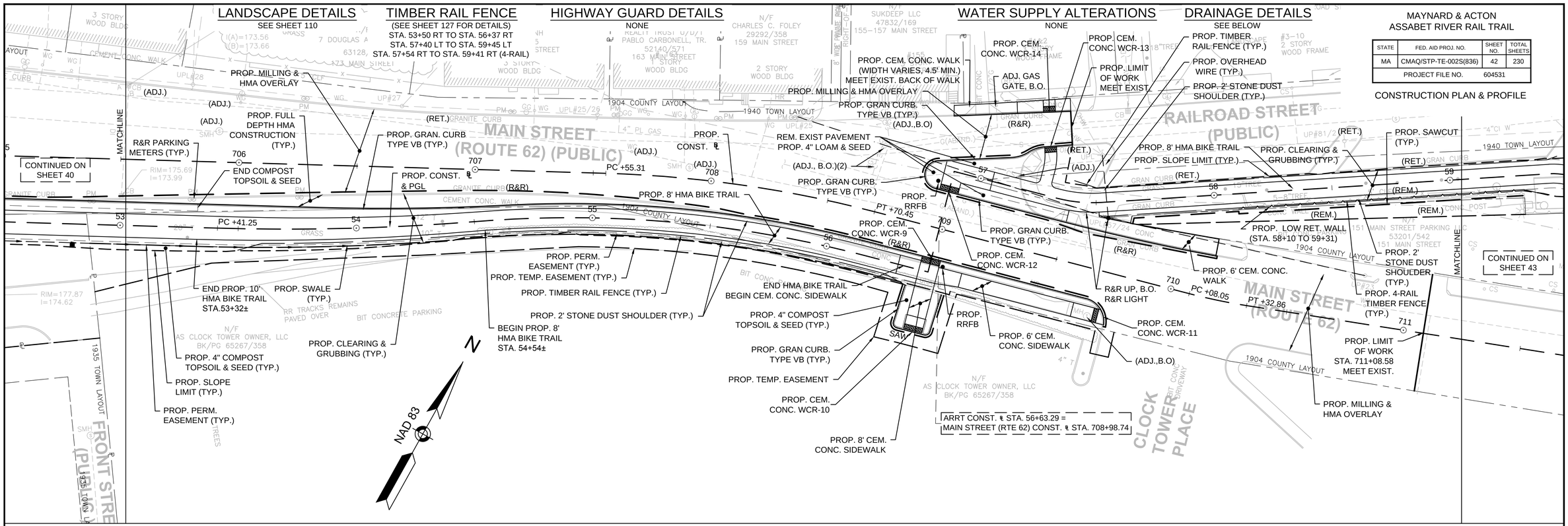

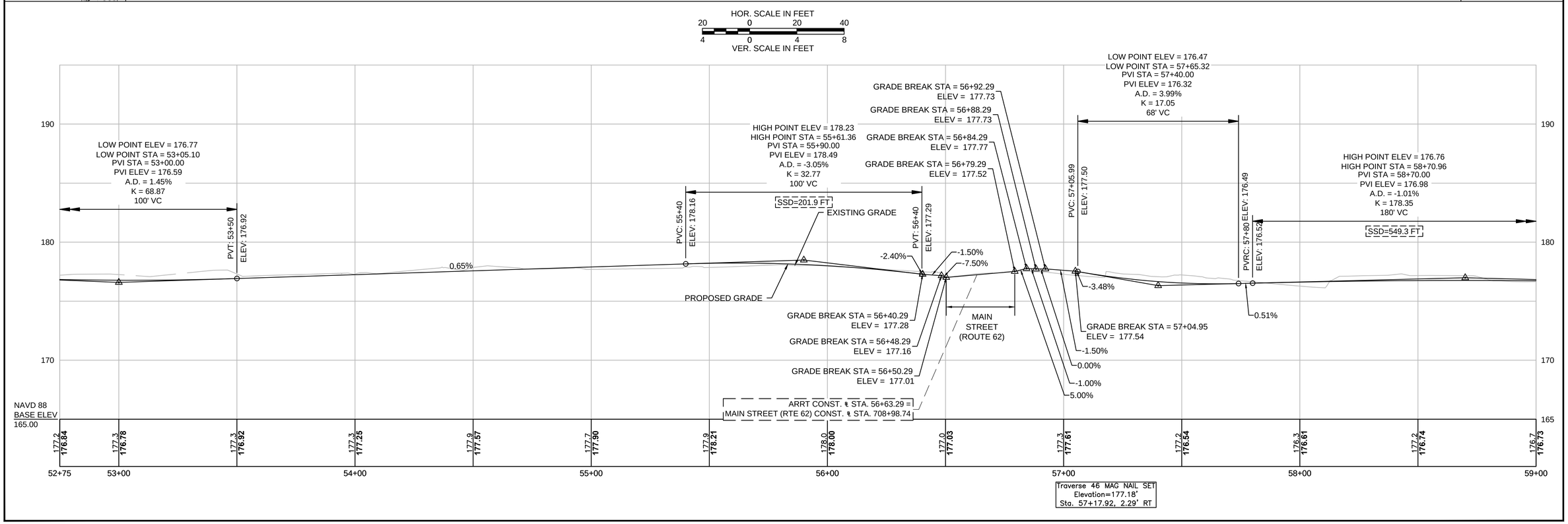

604531_HD(CO).DWG Plotted on 8-Oct-2015 1:06 PM

MAYNARD & ACTON
ASSABET RIVER RAIL TRAIL

STATE	FED. AID PROJ. NO.	SHEET NO.	TOTAL SHEETS
MA	CMAQ/STP-TE-002S(836)	41	230
PROJECT FILE NO.	604531		

CONSTRUCTION PLAN & PROFILE

604531_HD(CO).DWG Plotted on 8-Oct-2015 1:05 PM

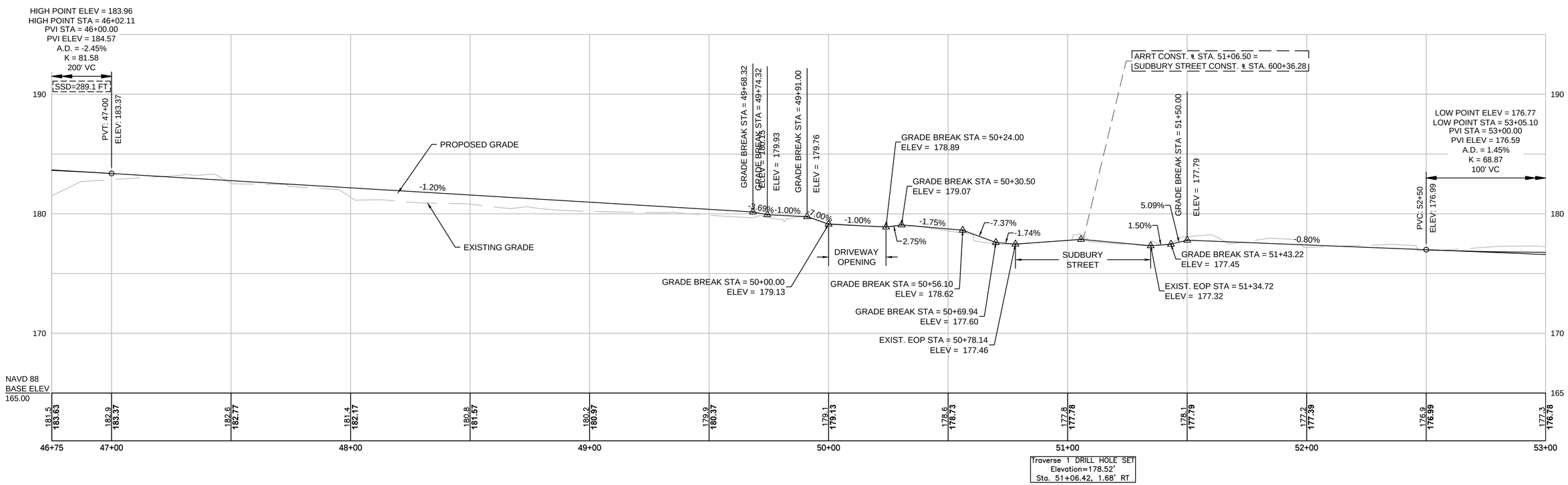

HOR. SCALE IN FEET
20 0 20 40
4 0 4 8
VER. SCALE IN FEET

NOTE:
1. FOR CONSTRUCTION PLAN SEE SHEET 40

LANDSCAPE DETAILS
SEE SHEET 110

TIMBER RAIL FENCE
(SEE SHEET 127 FOR DETAILS)
STA. 46+15 LT TO STA. 49+66 LT
STA. 53+50 RT TO STA. 56+37 RT

HIGHWAY GUARD DETAILS
NONE

WATER SUPPLY ALTERATIONS
NONE

DRAINAGE DETAILS
SEE BELOW

MAYNARD & ACTON
ASSABET RIVER RAIL TRAIL

STATE	FED. AID PROJ. NO.	SHEET NO.	TOTAL SHEETS
MA	CMAQ/STP-TE-002S(836)	40	230
PROJECT FILE NO.	604531		

CONSTRUCTION PLAN & PROFILE

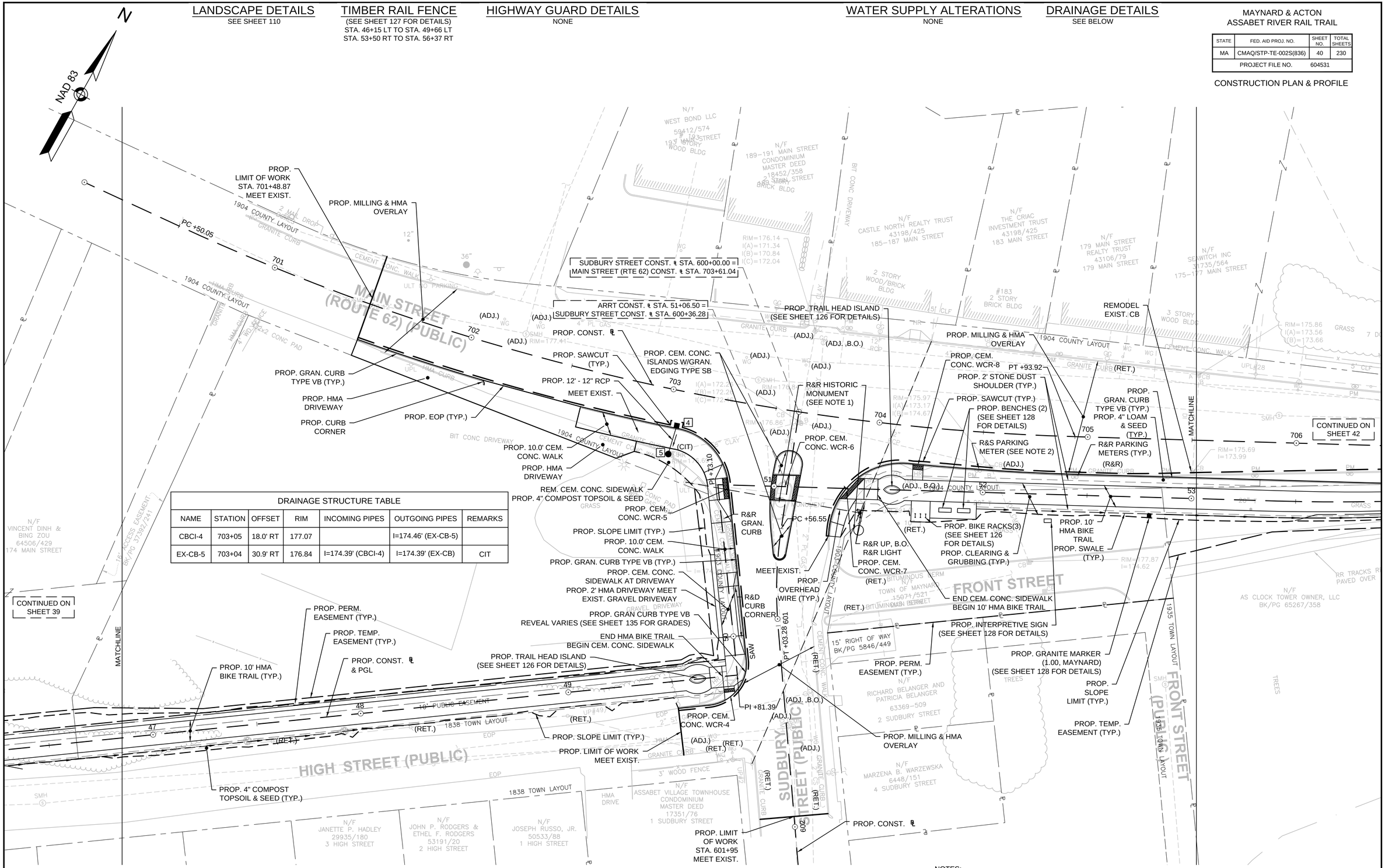

DRAINAGE STRUCTURE TABLE

NAME	STATION	OFFSET	RIM	INCOMING PIPES	OUTGOING PIPES	REMARKS
CBCI-4	703+05	18.0' RT	177.07		I=174.46' (EX-CB-5)	
EX-CB-5	703+04	30.9' RT	176.84	I=174.39' (CBCI-4)	I=174.39' (EX-CB)	CIT

NOTES:
1. THE CONTRACTOR SHALL CAREFULLY REMOVE, STORE, AND RESET THE MONUMENT WITHIN TOWN LAND, 5' BEHIND THE PROPOSED SIDEWALK.
2. DOUBLE PARKING METER SHALL BE STACKED AND A SINGLE PARKING METER SHALL BE RESET FROM THOSE REMOVED BETWEEN STATIONS 67+00 AND 73+50.
3. FOR PROFILE SEE SHEET 41

604531_HD(CO).DWG Plotted on 8-Oct-2015 1:04 PM

MAYNARD & ACTON
ASSABET RIVER RAIL TRAIL

STATE	FED. AID PROJ. NO.	SHEET NO.	TOTAL SHEETS
MA	CMAQ/STP-TE-002S(836)	39	230
PROJECT FILE NO.	604531		

CONSTRUCTION PLAN & PROFILE

LANDSCAPE DETAILS
SEE SHEET 109

TIMBER RAIL FENCE
(SEE SHEET 127 FOR DETAILS)
STA. 39+04 RT TO STA. 41+81 RT
STA. 46+09 RT TO STA. 46+36 RT
STA. 46+15 LT TO STA. 49+66 LT

HIGHWAY GUARD DETAILS
NONE

WATER SUPPLY ALTERATIONS
NONE

DRAINAGE DETAILS
SEE BELOW

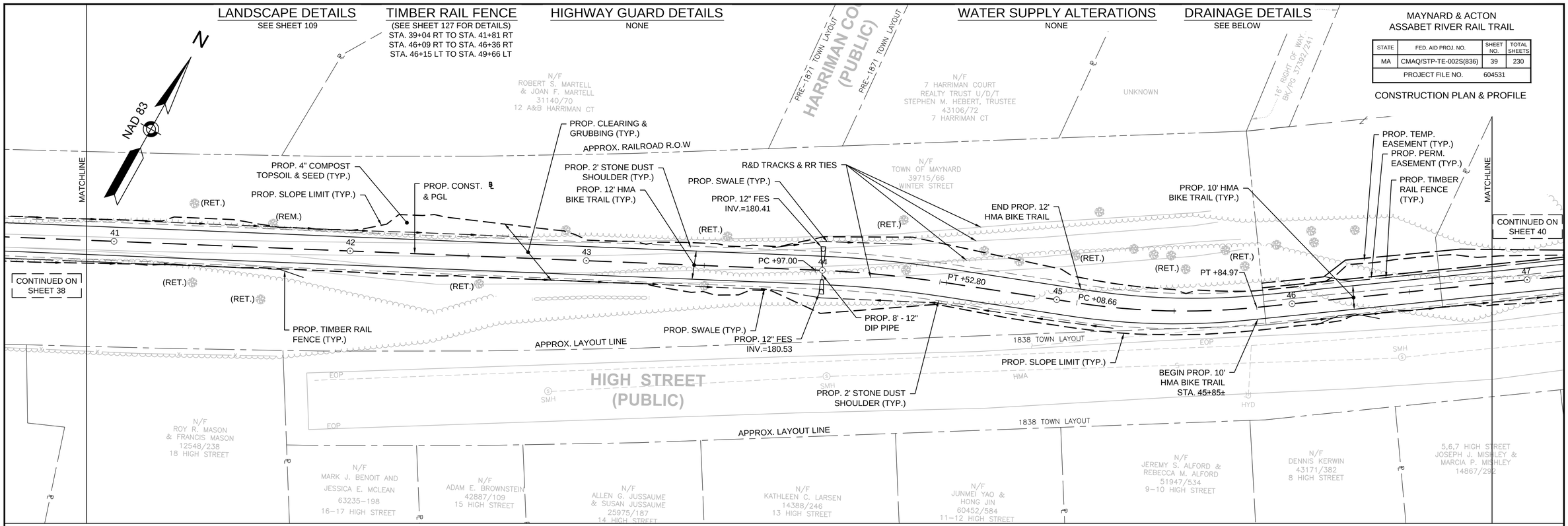

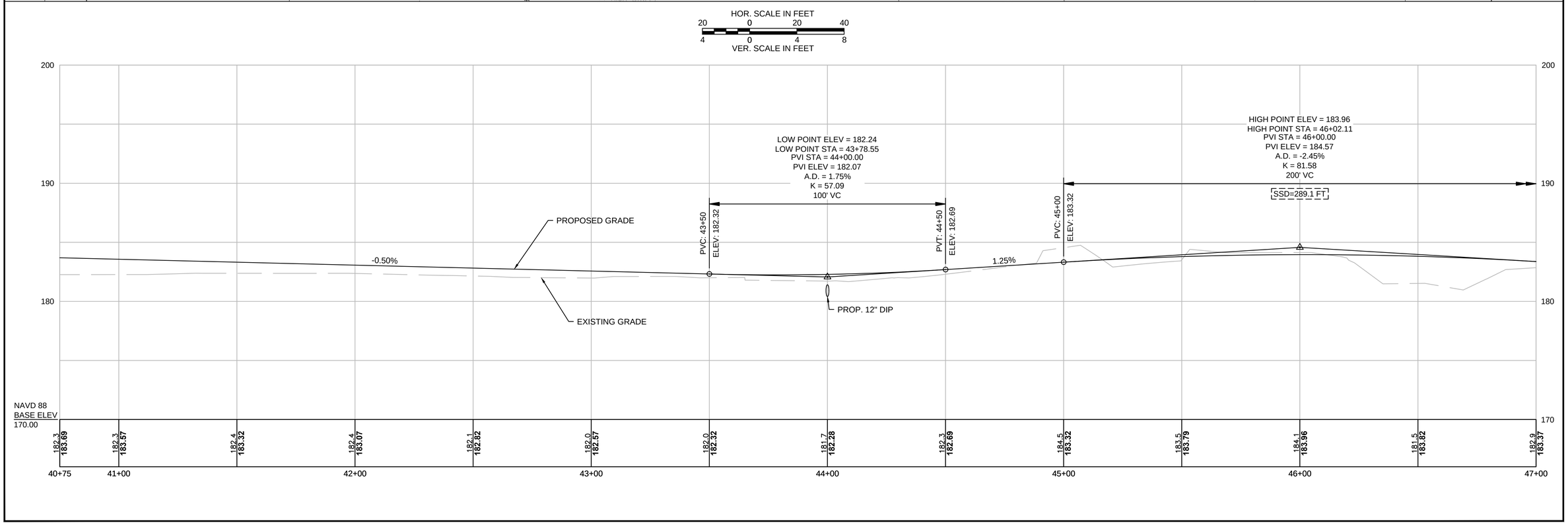

604531_HD(CO).DWG Plotted on 8-Oct-2015 1:04 PM

LANDSCAPE DETAILS
SEE SHEET 109

TIMBER RAIL FENCE
(SEE SHEET 127 FOR DETAILS)
STA. 35+19 RT TO STA. 36+76 RT
STA. 39+04 RT TO STA. 41+81 RT

HIGHWAY GUARD DETAILS
NONE

WATER SUPPLY ALTERATIONS
NONE

DRAINAGE DETAILS
SEE BELOW

MAYNARD & ACTON
ASSABET RIVER RAIL TRAIL

STATE	FED. AID PROJ. NO.	SHEET NO.	TOTAL SHEETS
MA	CMAQ/STP-TE-002S(836)	38	230
PROJECT FILE NO.	604531		

CONSTRUCTION PLAN & PROFILE

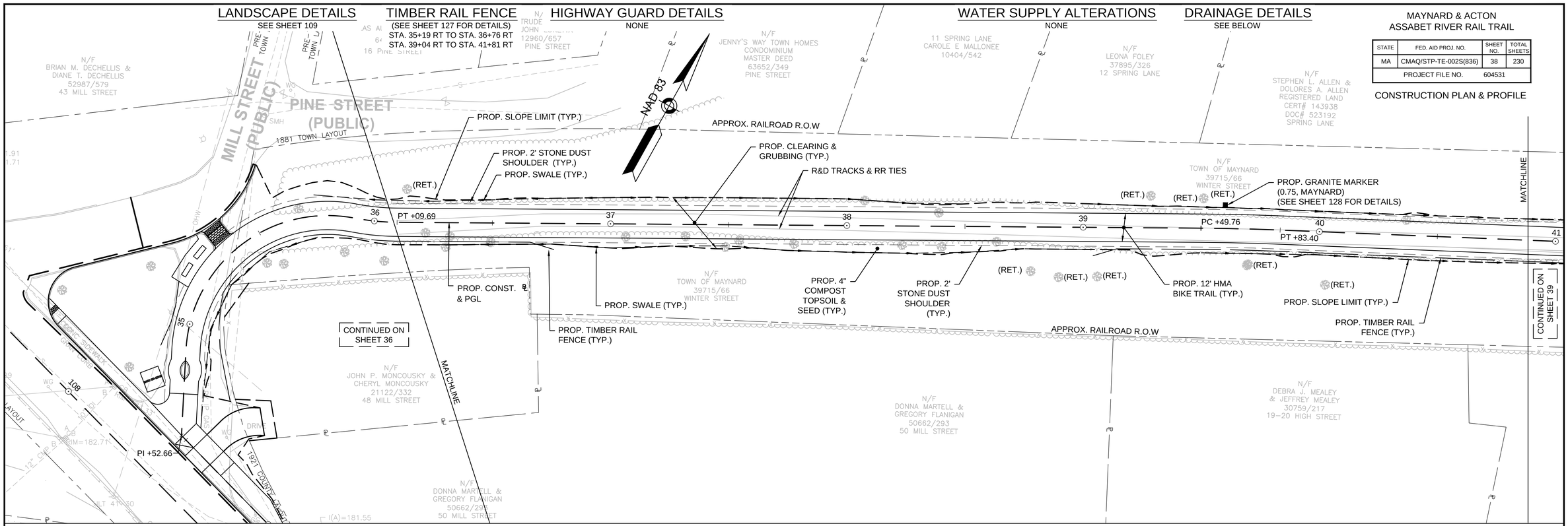

HOR. SCALE IN FEET
20 0 20 40
4 0 4 8
VER. SCALE IN FEET

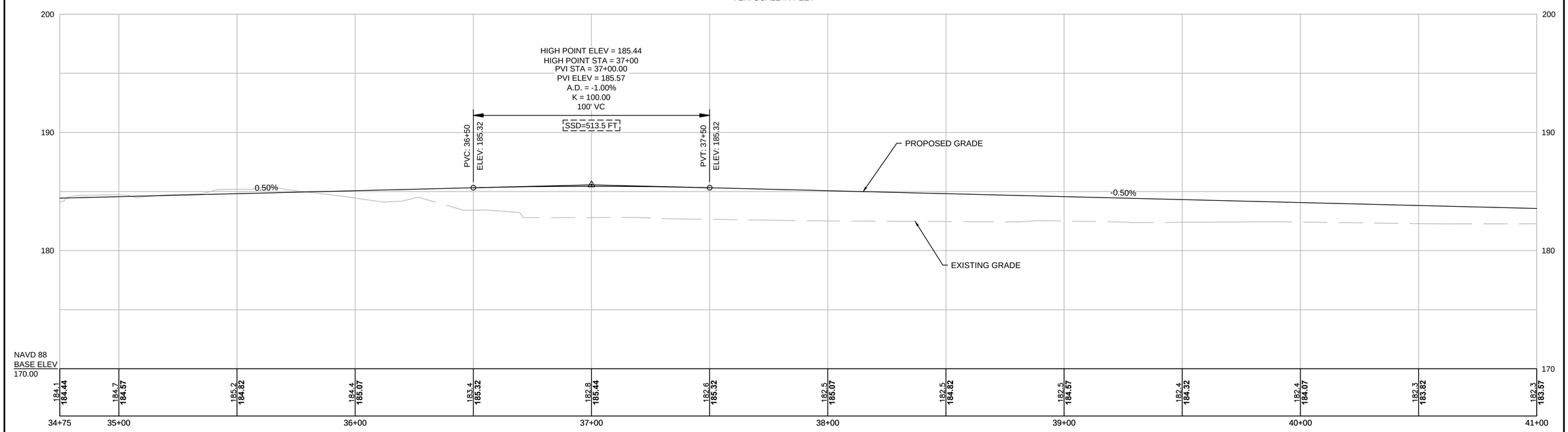

604531_HD(CO).DWG Plotted on 8-Oct-2015 1:04 PM

MAYNARD & ACTON
ASSABET RIVER RAIL TRAIL

STATE	FED. AID PROJ. NO.	SHEET NO.	TOTAL SHEETS
MA	CMAQ/STP-TE-002S(836)	37	230
PROJECT FILE NO.	604531		

CONSTRUCTION PLAN & PROFILE

604531_HD(CO).DWG Plotted on 8-Oct-2015 1:03 PM

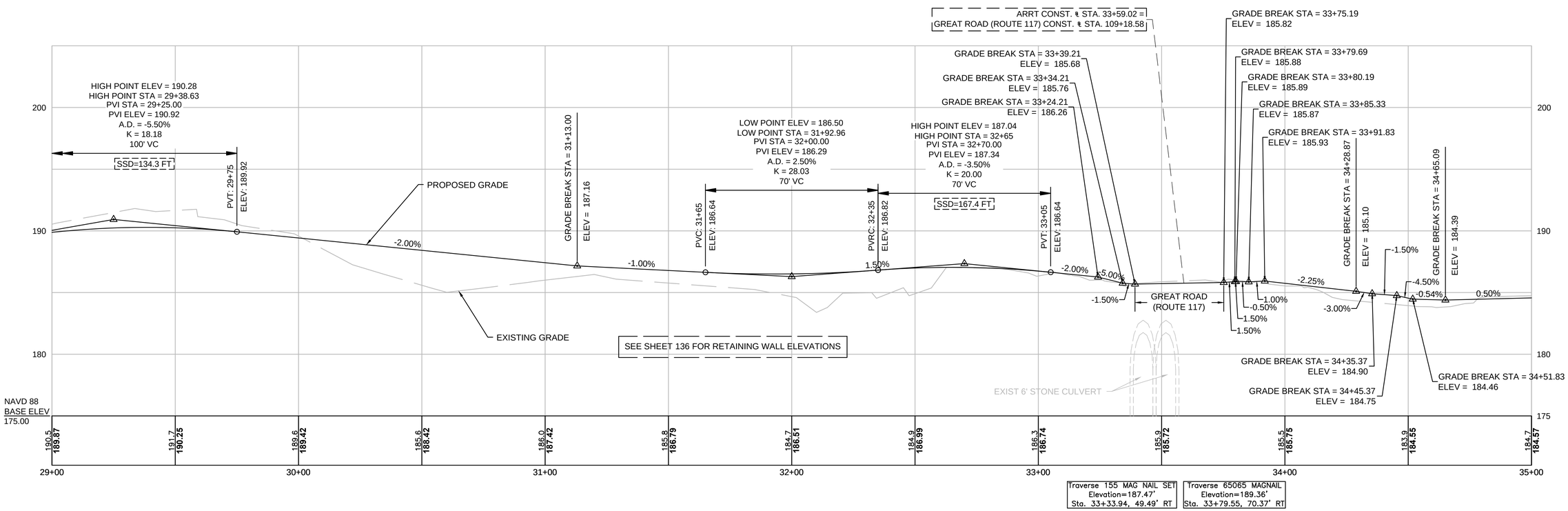

HOR. SCALE IN FEET
20 0 20 40
4 0 4 8
VER. SCALE IN FEET

NOTE:
1. FOR CONSTRUCTION PLAN SEE SHEET 36

LANDSCAPE DETAILS
SEE SHEET 108-109

TIMBER RAIL FENCE
(SEE SHEET 127 FOR DETAILS)
STA. 29+68 LT TO STA. 33+31 LT (4-RAIL)
STA. 34+89 LT TO STA. 35+16 LT
STA. 35+19 RT TO STA. 36+76 RT

HIGHWAY GUARD DETAILS
STA. 33+33 LT - ITEM 627.1
STA. 33+33 LT TO STA. 33+42 LT - ITEM 620.3

WATER SUPPLY ALTERATIONS
NONE

DRAINAGE DETAILS
SEE BELOW

MAYNARD & ACTON
ASSABET RIVER RAIL TRAIL

STATE	FED. AID PROJ. NO.	SHEET NO.	TOTAL SHEETS
MA	CMAQ/STP-TE-002S(836)	36	230
PROJECT FILE NO.	604531		

CONSTRUCTION PLAN & PROFILE

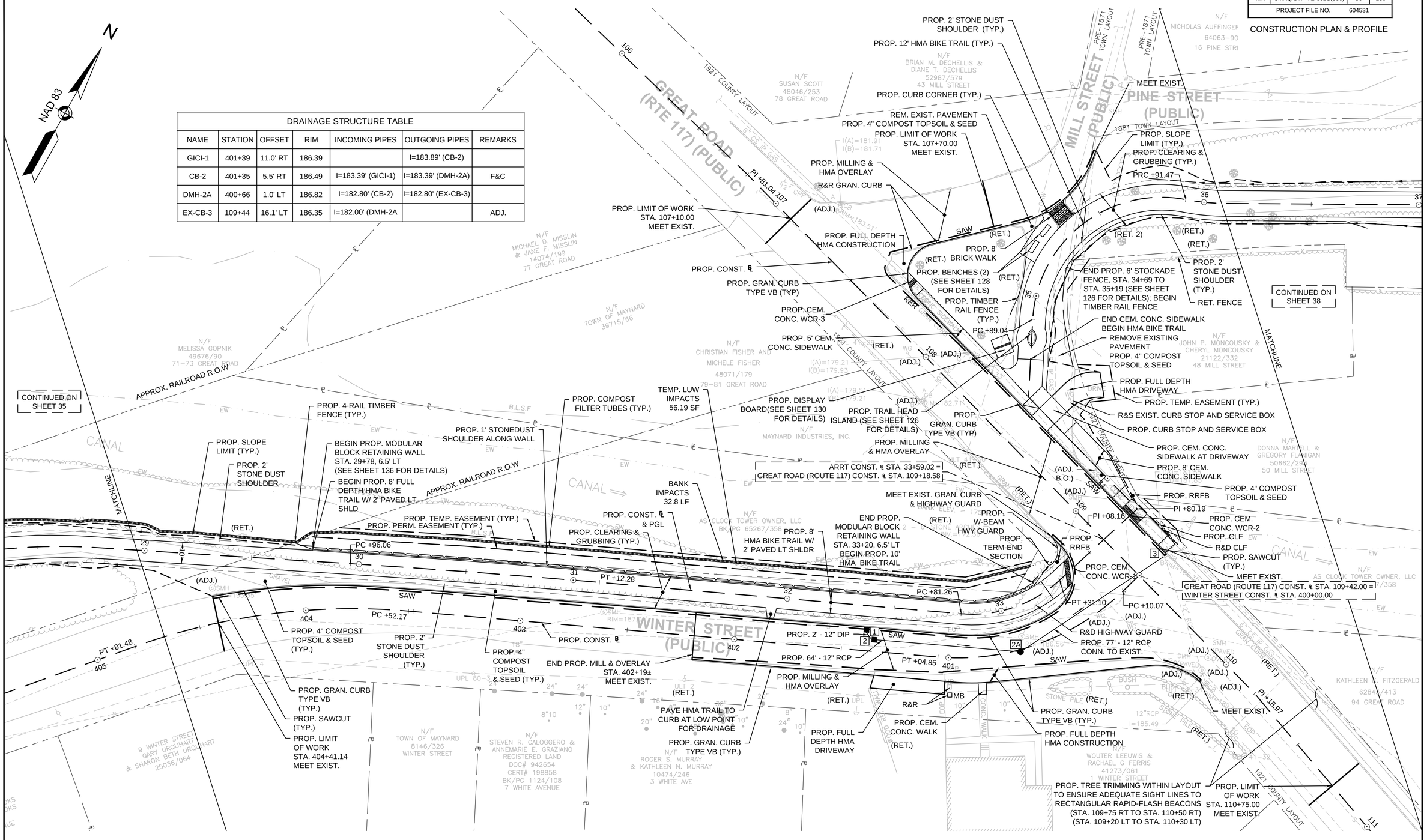

DRAINAGE STRUCTURE TABLE

NAME	STATION	OFFSET	RIM	INCOMING PIPES	OUTGOING PIPES	REMARKS
GICI-1	401+39	11.0' RT	186.39		I=183.89' (CB-2)	
CB-2	401+35	5.5' RT	186.49	I=183.39' (GICI-1)	I=183.39' (DMH-2A)	F&C
DMH-2A	400+66	1.0' LT	186.82	I=182.80' (CB-2)	I=182.80' (EX-CB-3)	
EX-CB-3	109+44	16.1' LT	186.35	I=182.00' (DMH-2A		ADJ.

NOTE:
1. FOR PROFILE SEE SHEET 37 AND SHEET 66

604531_HD(CO).DWG Plotted on 8-Oct-2015 1:02 PM

LANDSCAPE DETAILS
SEE SHEET 108

TIMBER RAIL FENCE
NONE

HIGHWAY GUARD DETAILS
NONE

WATER SUPPLY ALTERATIONS
NONE

DRAINAGE DETAILS
SEE BELOW

MAYNARD & ACTON
ASSABET RIVER RAIL TRAIL

STATE	FED. AID PROJ. NO.	SHEET NO.	TOTAL SHEETS
MA	CMAQ/STP-TE-002S(836)	35	230
PROJECT FILE NO.	604531		

CONSTRUCTION PLAN & PROFILE

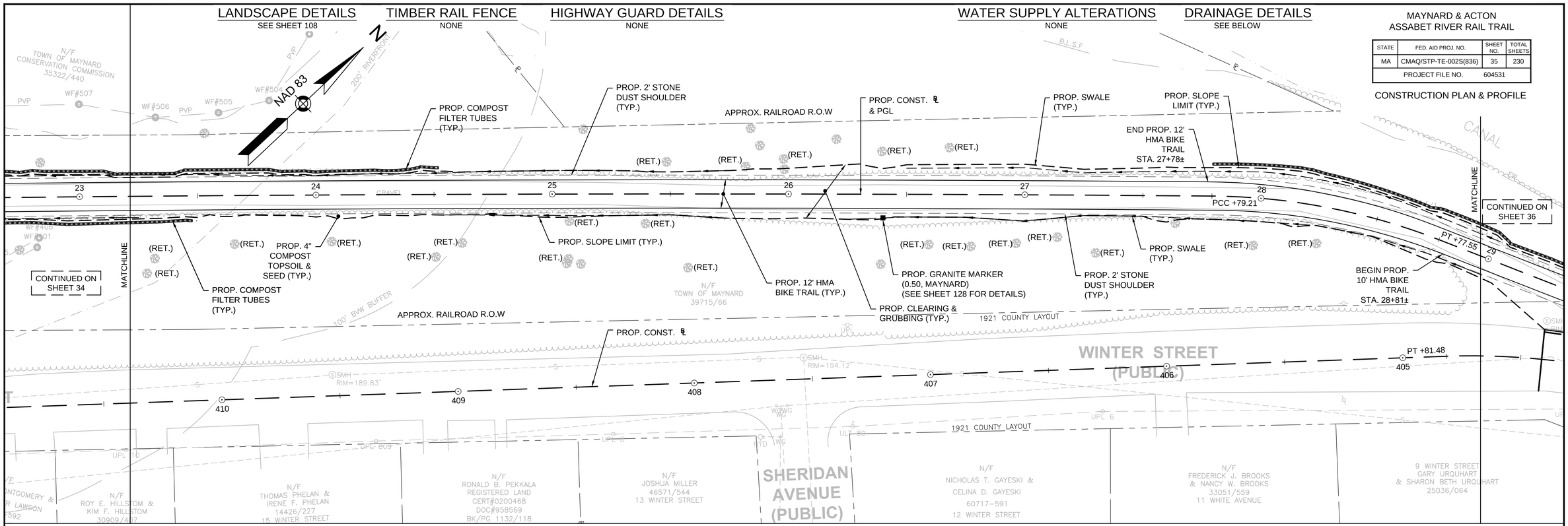

HOR. SCALE IN FEET
20 0 20 40
4 0 4 8
VER. SCALE IN FEET

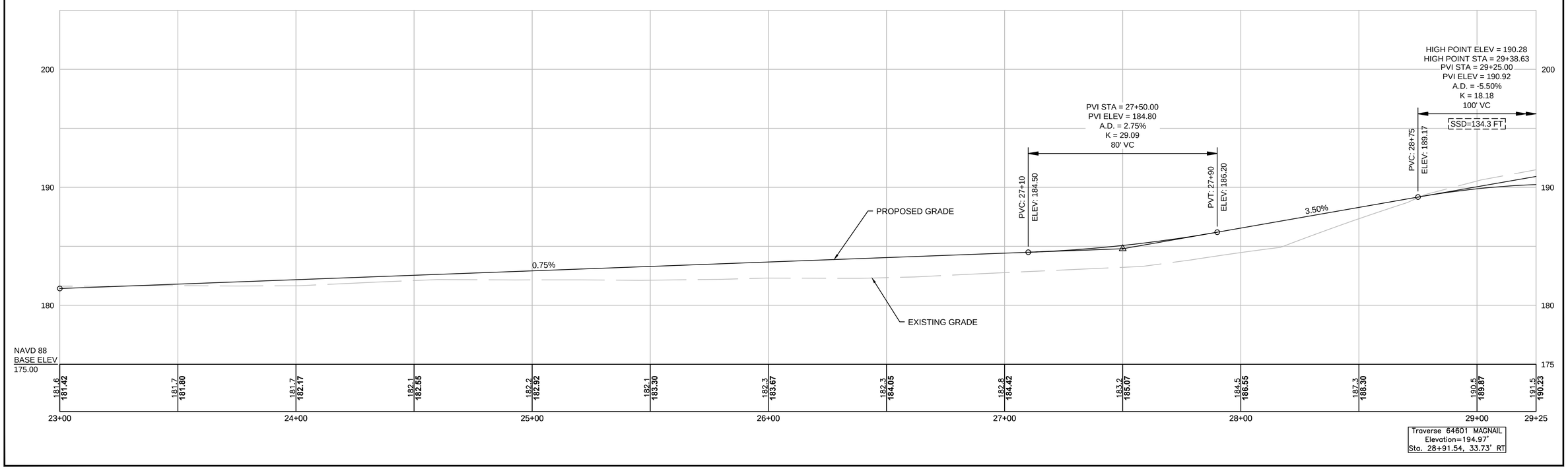

604531_HD(CO).DWG Plotted on 8-Oct-2015 1:02 PM

LANDSCAPE DETAILS
SEE SHEET 107

TIMBER RAIL FENCE
(SEE SHEET 127 FOR DETAILS)
STA. 20+82 RT TO STA. 21+53 RT

HIGHWAY GUARD DETAILS
NONE

WATER SUPPLY ALTERATIONS
NONE

DRAINAGE DETAILS
SEE BELOW

MAYNARD & ACTON
ASSABET RIVER RAIL TRAIL

STATE	FED. AID PROJ. NO.	SHEET NO.	TOTAL SHEETS
MA	CMAQ/STP-TE-002S(836)	34	230
PROJECT FILE NO.	604531		

CONSTRUCTION PLAN & PROFILE

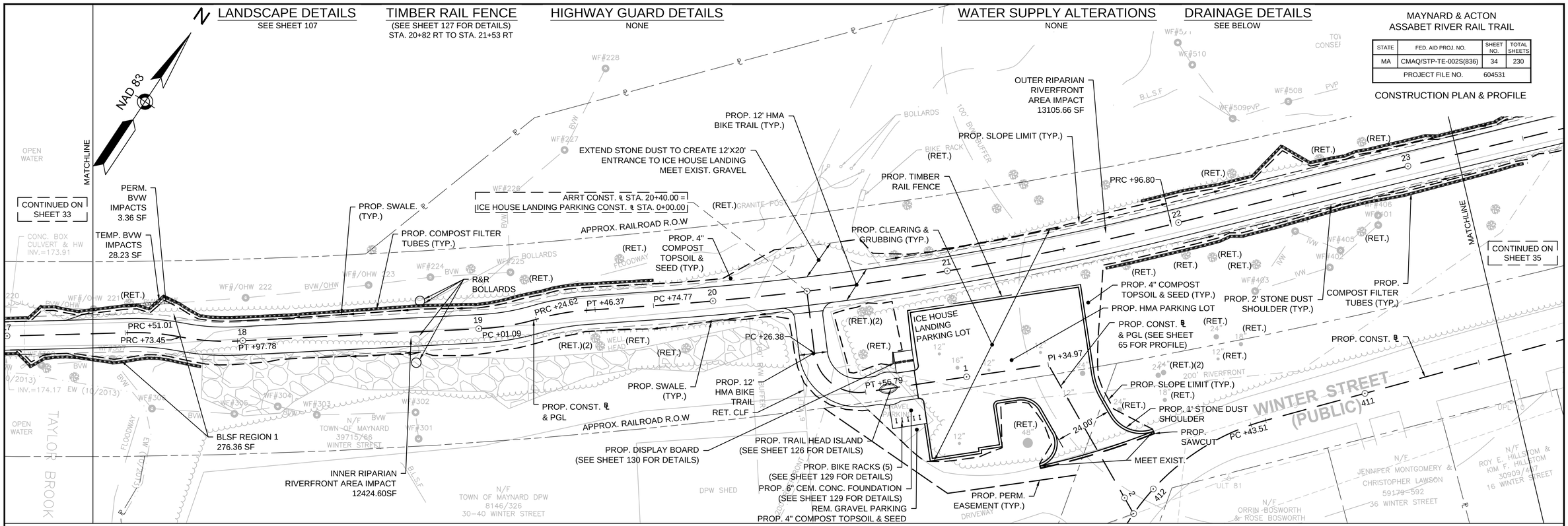

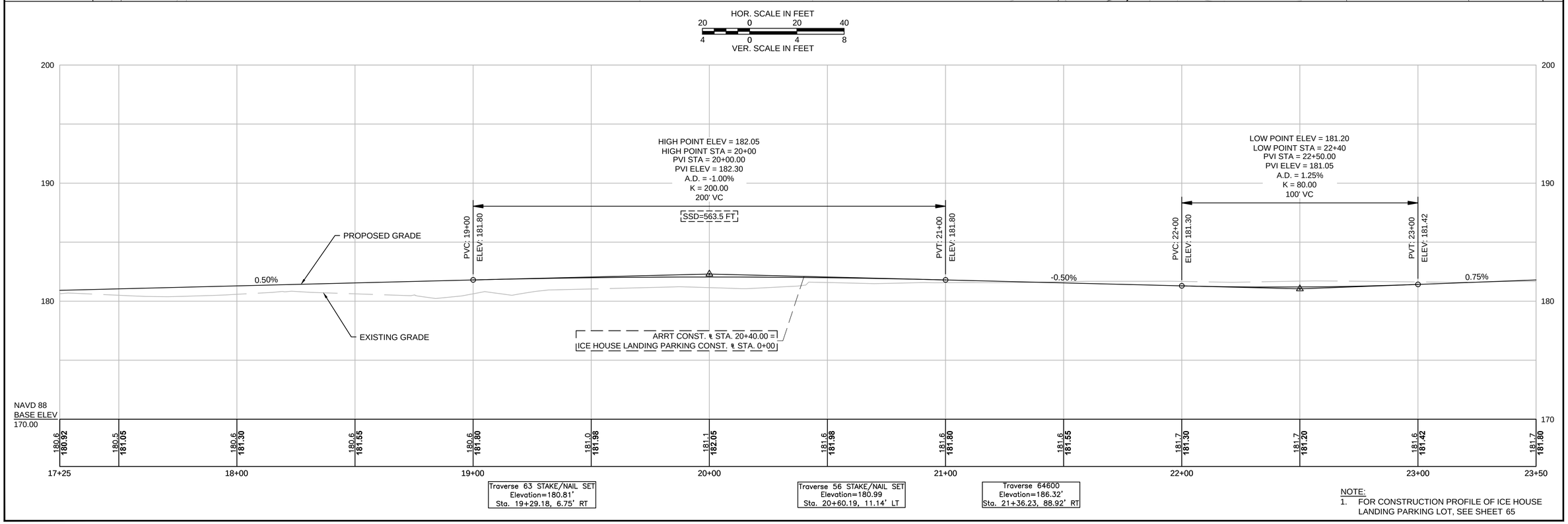

NOTE:
1. FOR CONSTRUCTION PROFILE OF ICE HOUSE LANDING PARKING LOT, SEE SHEET 65

604531_HD(CO).DWG Plotted on 8-Oct-2015 1:01 PM

LANDSCAPE DETAILS
SEE SHEET 107

TIMBER RAIL FENCE
(SEE SHEET 127 FOR DETAILS)
STA. 14+15 RT TO STA. 17+35 RT
STA. 16+70 LT TO STA. 17+35 LT

HIGHWAY GUARD DETAILS
NONE

WATER SUPPLY ALTERATIONS
NONE

DRAINAGE DETAILS
SEE BELOW

MAYNARD & ACTON
ASSABET RIVER RAIL TRAIL

STATE	FED. AID PROJ. NO.	SHEET NO.	TOTAL SHEETS
MA	CMAQ/STP-TE-002S(836)	33	230
PROJECT FILE NO.	604531		

CONSTRUCTION PLAN & PROFILE

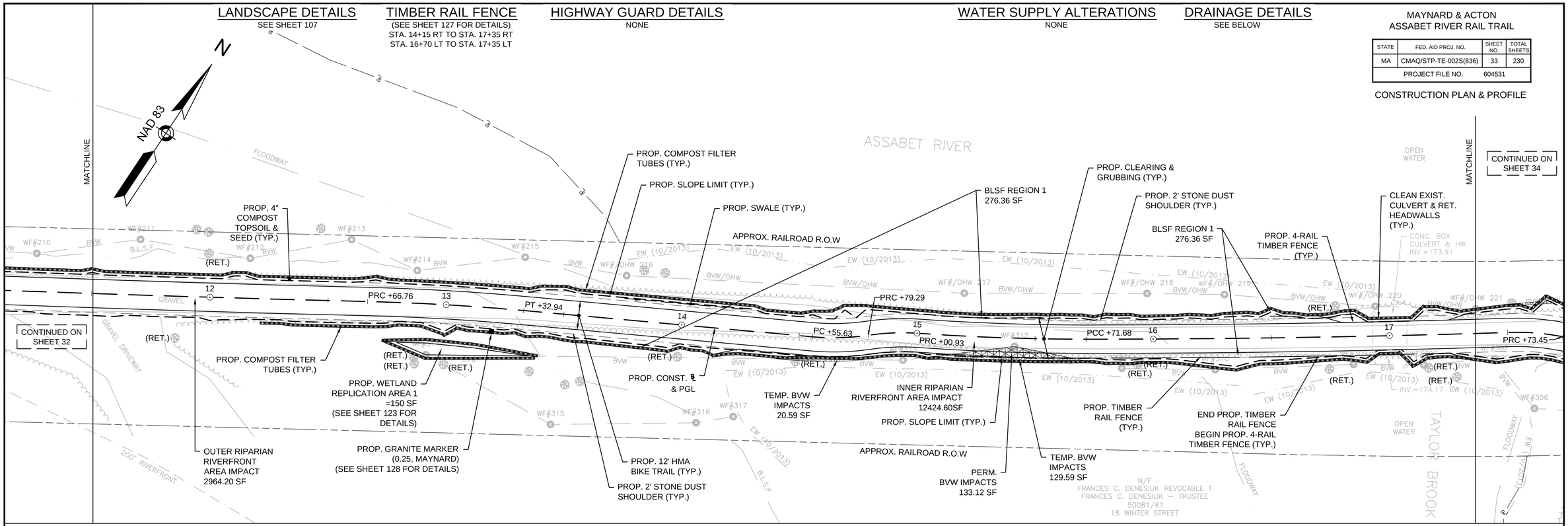

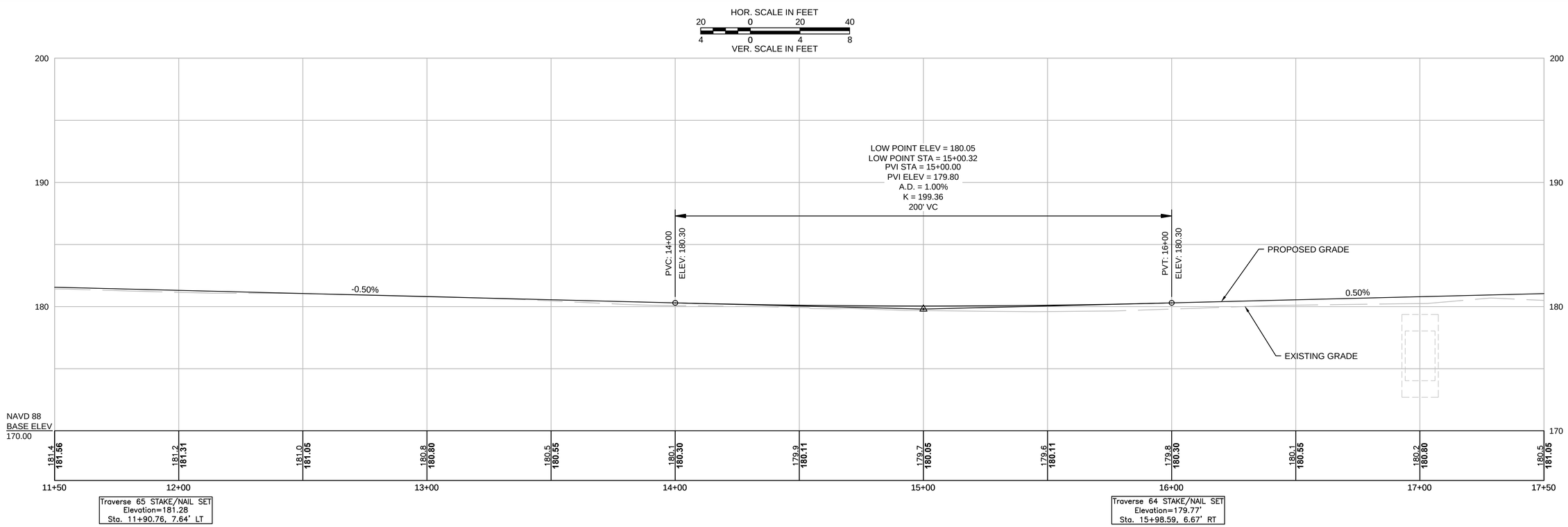

604531_HD(CO).DWG Plotted on 8-Oct-2015 1:01 PM

LANDSCAPE DETAILS
SEE SHEET 106

TIMBER RAIL FENCE
(SEE SHEET 127 FOR DETAILS)
STA. 10+67 RT TO STA. 10+97 RT
STA. 10+68 LT TO STA. 10+98 LT

HIGHWAY GUARD DETAILS
NONE

WATER SUPPLY ALTERATIONS
NONE

DRAINAGE DETAILS
SEE BELOW

MAYNARD & ACTON
ASSABET RIVER RAIL TRAIL

STATE	FED. AID PROJ. NO.	SHEET NO.	TOTAL SHEETS
MA	CMAQ/STP-TE-002S(836)	32	230
PROJECT FILE NO.	604531		

CONSTRUCTION PLAN & PROFILE

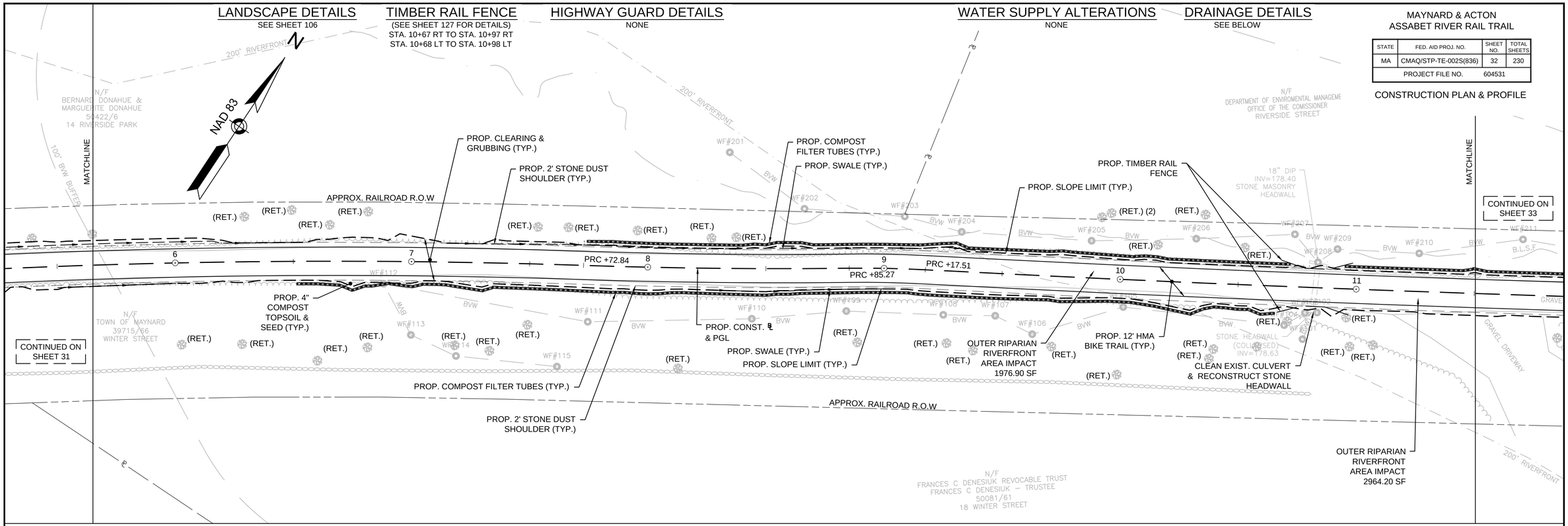

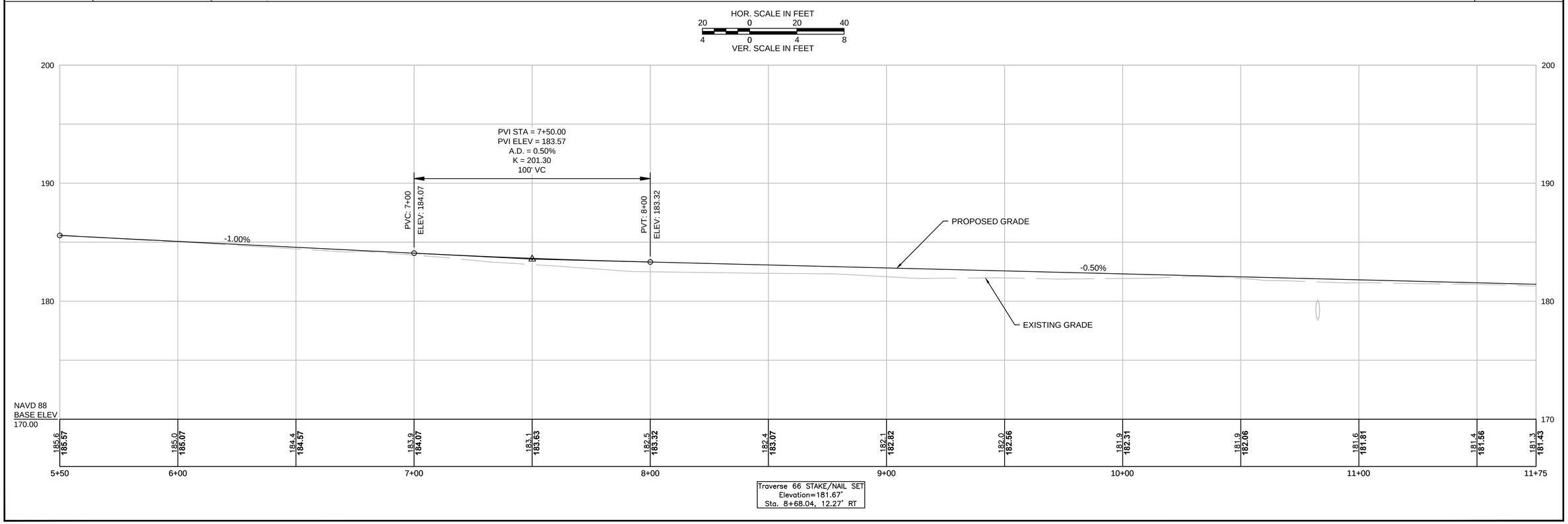

604531_HD(CO).DWG Plotted on 8-Oct-2015 1:00 PM

LANDSCAPE DETAILS
SEE SHEET 106

TIMBER RAIL FENCE
(SEE SHEET 127 FOR DETAILS)
STA. 3+35 LT TO STA. 5+00 LT

HIGHWAY GUARD DETAILS
NONE

WATER SUPPLY ALTERATIONS
NONE

DRAINAGE DETAILS
SEE BELOW

MAYNARD & ACTON
ASSABET RIVER RAIL TRAIL

STATE	FED. AID PROJ. NO.	SHEET NO.	TOTAL SHEETS
MA	CMAQ/STP-TE-002S(836)	31	230
PROJECT FILE NO.	604531		

CONSTRUCTION PLAN & PROFILE

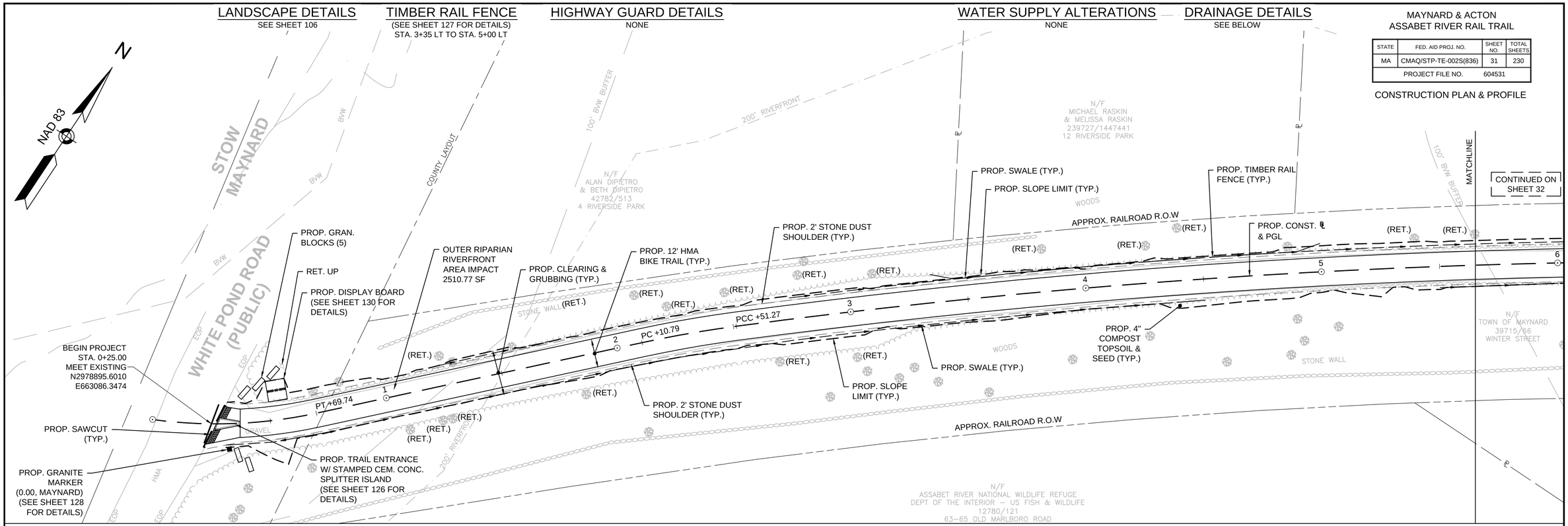

HOR. SCALE IN FEET
20 0 20 40
4 0 4 8
VER. SCALE IN FEET

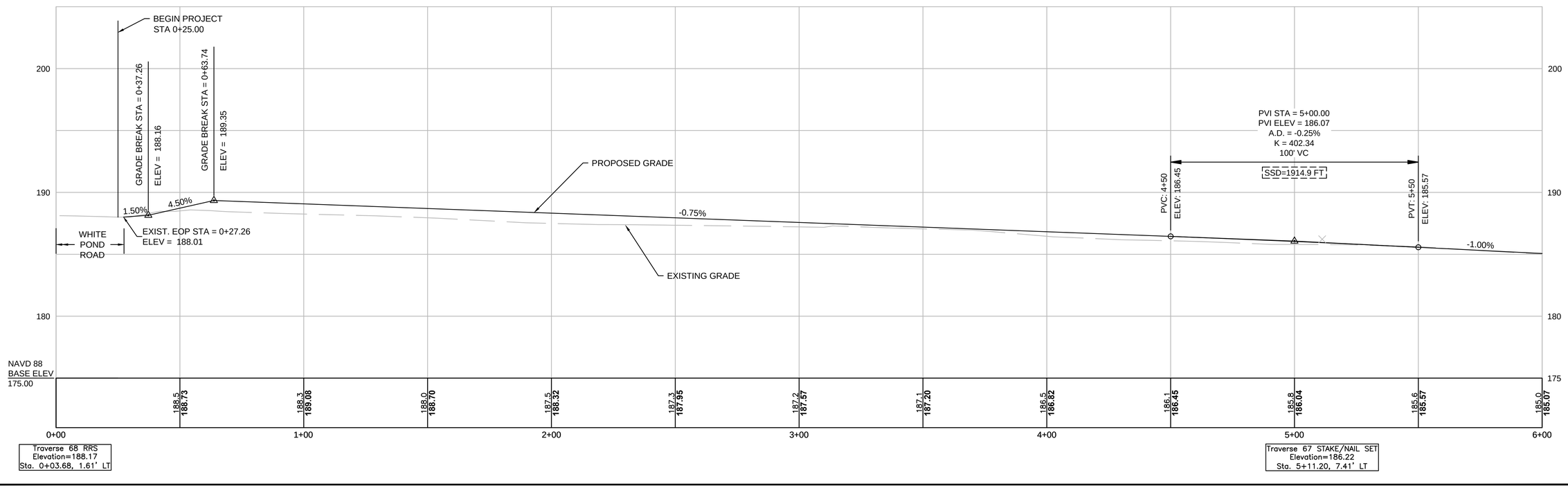

604531_HD(CO).DWG Plotted on 8-Oct-2015 1:00 PM

MAYNARD & ACTON
ASSABET RIVER RAIL TRAIL

STATE	FED. AID PROJ. NO.	SHEET NO.	TOTAL SHEETS
MA	CMAQ/STP-TE-002S(836)	30	230
PROJECT FILE NO.	604531		

CONSTRUCTION BASELINE TIES

ACTON STREET CONSTRUCTION BASELINE DATA

NUMBER	STARTING STATION	NORTHING	EASTING	CURVE DATA	LINE DATA	ENDING STATION	NORTHING	EASTING
L83	900+00.00	2983712.996	669182.879		N26° 28' 23"W 288.58'	902+88.58	2983971.321	669054.235
C107	902+88.58	2983971.321	669054.235	R=1000.00' Δ=2°03'33" L=35.94' T=17.97'		903+24.52	2984003.771	669038.797
L84	903+24.52	2984003.771	669038.797		N24° 24' 50"W 191.33'	905+15.85	2984177.993	668959.715
C108	905+15.85	2984177.993	668959.715	R=1000.00' Δ=4°08'24" L=72.26' T=36.14'		905+88.11	2984242.652	668927.500
L85	905+88.11	2984242.652	668927.500		N28° 33' 14"W 44.56'	906+32.67	2984281.796	668906.199
C109	906+32.67	2984281.796	668906.199	R=1000.00' Δ=2°24'06" L=41.92' T=20.96'		906+74.59	2984319.022	668886.941
L86	906+74.59	2984319.022	668886.941		N26° 09' 08"W 60.29'	907+34.88	2984373.139	668860.369
C110	907+34.88	2984373.139	668860.369	R=2000.00' Δ=8°24'13" L=293.34' T=146.94'		910+28.22	2984644.974	668750.814
L87	910+28.22	2984644.974	668750.814		N17° 44' 55"W 318.30'	913+46.52	2984948.122	668653.784
L88	913+46.52	2984948.122	668653.784		N16° 41' 42"W 153.96'	915+00.48	2985095.596	668609.553
C111	915+00.48	2985095.596	668609.553	R=2000.00' Δ=1°06'30" L=38.69' T=19.34'		915+39.17	2985132.758	668598.798
L89	915+39.17	2985132.758	668598.798		S15° 35' 12"E 64.08'	916+03.25	2985194.486	668581.579
C112	916+03.25	2985194.486	668581.579	R=100.00' Δ=7°43'01" L=13.47' T=6.74'		916+16.72	2985207.664	668578.843
L90	916+16.72	2985207.664	668578.843		N7° 52' 11"W 99.80'	917+16.53	2985306.528	668565.178
L91	917+16.53	2985306.528	668565.178		N9° 01' 43"W 476.89'	921+93.42	2985777.510	668490.341
L92	921+93.42	2985777.510	668490.341		N9° 00' 03"W 572.94'	927+66.35	2986343.392	668400.707
C113	927+66.35	2986343.392	668400.707	R=1000.00' Δ=2°39'01" L=46.25' T=23.13'		928+12.61	2986389.228	668394.530
L93	928+12.61	2986389.228	668394.530		N6° 21' 02"W 97.50'	929+10.11	2986486.128	668383.745
C114	929+10.11	2986486.128	668383.745	R=225.00' Δ=38°31'54" L=151.31' T=78.64'		930+61.42	2986630.850	668416.932
L94	930+61.42	2986630.850	668416.932		N32° 10' 52"E 291.09'	933+52.51	2986877.215	668571.964
C115	933+52.51	2986877.215	668571.964	R=2500.00' Δ=1°48'10" L=78.66' T=39.33'		934+31.17	2986943.122	668614.899
L95	934+31.17	2986943.122	668614.899		N33° 59' 02"E 14.71'	934+45.88	2986955.318	668623.121
C116	934+45.88	2986955.318	668623.121	R=200.00' Δ=25°34'26" L=89.27' T=45.39'		935+35.15	2987015.954	668687.626
L96	935+35.15	2987015.954	668687.626		N59° 33' 29"E 63.21'	935+98.36	2987047.982	668742.125

MAPLE STREET CONSTRUCTION BASELINE DATA

NUMBER	STARTING STATION	NORTHING	EASTING	CURVE DATA	LINE DATA	ENDING STATION	NORTHING	EASTING
L114	200+00.00	2992623.399	667591.730		S80° 29' 45"E 179.28'	201+79.28	2992593.797	667768.551
C132	201+79.28	2992593.797	667768.551	R=300.00' Δ=22°58'01" L=120.25' T=60.95'		202+99.54	2992597.922	667887.930
C133	202+99.54	2992597.922	667887.930	R=375.00' Δ=28°09'23" L=184.28' T=94.04'		204+83.82	2992595.962	668070.354
L115	204+83.82	2992595.962	668070.354		S75° 18' 23"E 157.75'	206+41.57	2992555.948	668222.946
C134	206+41.57	2992555.948	668222.946	R=250.00' Δ=33°21'11" L=145.53' T=74.89'		207+87.10	2992560.912	668366.343
L116	207+87.10	2992560.912	668366.343		N71° 20' 27"E 106.85'	208+93.95	2992595.097	668467.575

ROUTE 27 CONSTRUCTION BASELINE DATA

NUMBER	STARTING STATION	NORTHING	EASTING	CURVE DATA	LINE DATA	ENDING STATION	NORTHING	EASTING
L101	2000+00.00	2984043.614	669020.711		N3° 25' 22"W 218.82'	2002+18.82	2984262.047	669007.646
C120	2002+18.82	2984262.047	669007.646	R=1000.00' Δ=10°05'03" L=176.00' T=88.23'		2003+94.82	2984437.750	669012.613
L102	2003+94.82	2984437.750	669012.613		N6° 39' 40"E 248.70'	2006+43.52	2984684.767	669041.461
C121	2006+43.52	2984684.767	669041.461	R=700.00' Δ=8°51'46" L=108.28' T=54.25'		2007+51.80	2984792.856	669045.670
L103	2007+51.80	2984792.856	669045.670		N2° 12' 06"W 1261.14'	2020+12.93	2986053.061	668997.222
C122	2020+12.93	2986053.061	668997.222	R=480.00' Δ=26°57'47" L=225.88' T=115.07'		2022+38.82	2986268.535	668936.723
L104	2022+38.82	2986268.535	668936.723		N29° 09' 52"W 191.19'	2024+30.01	2986435.489	668843.551
C123	2024+30.01	2986435.489	668843.551	R=620.00' Δ=22°08'00" L=239.51' T=121.26'		2026+69.52	2986661.733	668769.613
L105	2026+69.52	2986661.733	668769.613		N7° 01' 52"W 159.09'	2028+28.61	2986819.625	668750.138
C124	2028+28.61	2986819.625	668750.138	R=5000.00' Δ=1°50'58" L=161.39' T=80.70'		2029+89.99	2986979.453	668727.801
L106	2029+89.99	2986979.453	668727.801		N8° 52' 50"W 178.30'	2031+68.29	2987155.616	668700.276
L107	2031+68.29	2987155.616	668700.276		N9° 44' 01"W 401.82'	2035+70.12	2987551.653	668632.341
C125	2035+70.12	2987551.653	668632.341	R=2000.00' Δ=5°22'57" L=187.88' T=94.01'		2037+58.00	2987738.049	668609.314
L108	2037+58.00	2987738.049	668609.314		N4° 21' 04"W 2590.70'	2063+48.69	2990321.277	668412.758
L108	2037+58.00	2987738.049	668609.314		N4° 21' 04"W 2590.70'	2063+48.69	2990321.277	668412.758
C126	2063+48.69	2990321.277	668412.758	R=1400.00' Δ=7°42'23" L=188.30' T=94.29'		2065+36.99	2990509.429	668411.122
L109	2065+36.99	2990509.429	668411.122		N3° 21' 18"E 1184.36'	2077+21.35	2991691.755	668480.435
C127	2077+21.35	2991691.755	668480.435	R=2400.00' Δ=9°26'07" L=395.23' T=198.06'		2081+16.58	2992082.622	668535.875
L110	2081+16.58	2992082.622	668535.875		N12° 47' 26"E 50.12'	2081+66.69	2992131.494	668546.969
C128	2081+66.69	2992131.494	668546.969	R=500.00' Δ=31°50'00" L=277.80' T=142.59'		2084+44.49	2992405.324	668532.013
L111	2084+44.49	2992405.324	668532.013		N19° 02' 34"W 155.56'	2086+00.04	2992552.368	668481.259
C129	2086+00.04	2992552.368	668481.259	R=1000.00' Δ=5°08'15" L=89.66' T=44.86'		2086+89.71	2992638.323	668455.840
L112	2086+89.71	2992638.323	668455.840		N13° 54' 20"W 33.00'	2087+22.71	2992670.354	668447.910
C130	2087+22.71	2992670.354	668447.910	R=1000.00' Δ=6°32'04" L=114.05' T=57.09'		2088+36.76	2992779.258	668414.255
L113	2088+36.76	2992779.258	668414.255		N20° 26' 24"W 233.05'	2090+69.81	2992997.636	668332.868
C131	2090+69.81	2992997.636	668332.868	R=1300.00' Δ=7°25'32" L=168.48' T=84.36'		2092+38.29	2993151.262	668263.978
L123	2092+38.29	2993151.262	668263.978		N27° 51' 56"W 397.11'	2096+35.40	2993502.322	668078.371

604531_HD(SC).DWG Plotted on 8-Oct-2015 12:58 PM

MAYNARD & ACTON
ASSABET RIVER RAIL TRAIL

STATE	FED. AID PROJ. NO.	SHEET NO.	TOTAL SHEETS
MA	CMAQ/STP-TE-002S(836)	29	230
PROJECT FILE NO.	604531		

CONSTRUCTION BASELINE TIES

ICE HOUSE LANDING PARKING CONSTRUCTION BASELINE DATA

NUMBER	STARTING STATION	NORTHING	EASTING	CURVE DATA	LINE DATA	ENDING STATION	NORTHING	EASTING
L59	0+00.00	2980053.624	664726.532		S40° 28' 32"E 26.38'	0+26.38	2980033.560	664743.653
C92	0+26.38	2980033.560	664743.653	R=19.00' Δ=91°42'26" L=30.41' T=19.57'		0+56.79	2980031.815	664770.864
L134	0+56.79	2980031.815	664770.864		N47° 49' 02"E 78.18'	1+34.97	2980084.312	664828.796
L135	1+34.97	2980084.312	664828.796		S63° 22' 03"E 72.72'	2+07.69	2980051.712	664893.804

WINTER STREET CONSTRUCTION BASELINE DATA

NUMBER	STARTING STATION	NORTHING	EASTING	CURVE DATA	LINE DATA	ENDING STATION	NORTHING	EASTING
L62	400+00.00	2980870.402	665746.269		S16° 28' 40"W 10.07'	400+10.07	2980860.746	665743.413
C94	400+10.07	2980860.746	665743.413	R=110.00' Δ=49°22'14" L=94.78' T=50.56'		401+04.85	2980791.576	665682.938
L63	401+04.85	2980791.576	665682.938		S65° 50' 53"W 247.31'	403+52.17	2980690.385	665457.273
C95	403+52.17	2980690.385	665457.273	R=300.00' Δ=24°41'51" L=129.32' T=65.68'		404+81.48	2980614.058	665354.125
L64	404+81.48	2980614.058	665354.125		S41° 09' 02"W 662.02'	411+43.51	2980115.566	664918.487
C96	411+43.51	2980115.566	664918.487	R=100.00' Δ=58°14'19" L=101.65' T=55.70'		412+45.15	2980020.377	664898.200
L65	412+45.15	2980020.377	664898.200		S17° 05' 17"E 176.67'	414+21.82	2979851.510	664950.112

GREAT ROAD (ROUTE 117) CONSTRUCTION BASELINE DATA

NUMBER	STARTING STATION	NORTHING	EASTING	CURVE DATA	LINE DATA	ENDING STATION	NORTHING	EASTING
L66	100+00.00	2981118.923	664837.733		S75° 10' 52"E 681.04'	106+81.04	2980944.738	665496.119
L67	106+81.04	2980944.738	665496.119		S73° 24' 08"E 227.12'	109+08.16	2980879.860	665713.777
L68	109+08.16	2980879.860	665713.777		S73° 31' 20"E 110.81'	110+18.97	2980848.430	665820.035
L69	110+18.97	2980848.430	665820.035		S69° 13' 19"E 581.03'	116+00.00	2980642.310	666363.277

MAIN STREET (RTE 62) CONSTRUCTION BASELINE DATA

NUMBER	STARTING STATION	NORTHING	EASTING	CURVE DATA	LINE DATA	ENDING STATION	NORTHING	EASTING
L70	700+00.00	2981764.482	666501.781		N85° 40' 46"E 50.05'	700+50.05	2981768.253	666551.690
C97	700+50.05	2981768.253	666551.690	R=1100.00' Δ=23°07'11" L=443.87' T=224.99'		704+93.92	2981888.886	666975.724
L71	704+93.92	2981888.886	666975.724		N62° 33' 35"E 261.40'	707+55.31	2982009.345	667207.713
C98	707+55.31	2982009.345	667207.713	R=510.00' Δ=12°56'05" L=115.13' T=57.81'		708+70.45	2982050.467	667314.992
L72	708+70.45	2982050.467	667314.992		N75° 29' 40"E 137.60'	710+08.05	2982084.933	667448.206
C99	710+08.05	2982084.933	667448.206	R=250.00' Δ=5°41'09" L=24.81' T=12.42'		710+32.86	2982092.327	667471.877
L78	710+32.86	2982092.327	667471.877		N69° 48' 31"E 751.28'	717+84.14	2982351.638	668176.985
C100	717+84.14	2982351.638	668176.985	R=1000.00' Δ=4°58'23" L=86.79' T=43.42'		718+70.93	2982378.026	668259.643
L75	718+70.93	2982378.026	668259.643		N74° 46' 53"E 424.48'	722+95.41	2982489.452	668669.234

SUDBURY STREET CONSTRUCTION BASELINE DATA

NUMBER	STARTING STATION	NORTHING	EASTING	CURVE DATA	LINE DATA	ENDING STATION	NORTHING	EASTING
L77	601+03.28	2981740.492	666895.532		S33° 54' 19"E 296.72'	604+00.00	2981494.225	667061.050
C102	600+56.55	2981781.952	666874.213	R=200.00' Δ=13°23'10" L=46.73' T=23.47'		601+03.28	2981740.492	666895.532
L76	600+00.00	2981834.916	666854.390		S20° 31' 09"E 56.55'	600+56.55	2981781.952	666874.213

SUMMER STREET CONSTRUCTION BASELINE DATA

NUMBER	STARTING STATION	NORTHING	EASTING	CURVE DATA	LINE DATA	ENDING STATION	NORTHING	EASTING
L79	800+00.00	2982815.208	669628.731		N71° 10' 44"W 683.55'	806+83.55	2983035.730	668981.732
C103	806+83.55	2983035.730	668981.732	R=1000.00' Δ=6°25'22" L=112.10' T=56.11'		807+95.65	2983065.879	668873.823
L80	807+95.65	2983065.879	668873.823		N77° 36' 06"W 85.84'	808+81.49	2983084.309	668789.984
C104	808+81.49	2983084.309	668789.984	R=500.00' Δ=3°00'53" L=26.31' T=13.16'		809+07.80	2983089.279	668764.151
C105	809+26.60	2983092.345	668745.598	R=200.00' Δ=4°26'36" L=15.51' T=7.76'		809+42.11	2983095.465	668730.409
L82	809+42.11	2983095.465	668730.409		N76° 10' 24"W 335.52'	812+77.63	2983175.648	668404.614

CONCORD STREET CONSTRUCTION BASELINE DATA

NUMBER	STARTING STATION	NORTHING	EASTING	CURVE DATA	LINE DATA	ENDING STATION	NORTHING	EASTING
L97	1008+94.86	2984294.769	668850.788		S55° 38' 08"W 103.60'	1009+98.46	2984236.291	668765.269
C119	1007+95.60	2984354.770	668929.813	R=1000.00' Δ=5°41'14" L=99.26' T=49.67'		1008+94.86	2984294.769	668850.788
L98	1007+32.73	2984395.225	668977.937		S49° 56' 53"W 62.87'	1007+95.60	2984354.770	668929.813
C118	1006+50.58	2984450.771	669038.424	R=937.71' Δ=5°01'10" L=82.15' T=41.10'		1007+32.73	2984395.225	668977.937
L99	1006+39.31	2984458.748	669046.382		S44° 55' 44"W 11.27'	1006+50.58	2984450.771	669038.424
C117	1005+73.78	2984503.595	669094.149	R=1000.00' Δ=3°45'17" L=65.53' T=32.78'		1006+39.31	2984458.748	669046.382
L100	1000+00.00	2984882.415	669525.101		S48° 41' 01"W 573.78'	1005+73.78	2984503.595	669094.149

STOW ST CONSTRUCTION BASELINE DATA

NUMBER	STARTING STATION	NORTHING	EASTING	CURVE DATA	LINE DATA	ENDING STATION	NORTHING	EASTING
L117	300+00.00	2992459.307	667691.694		N53° 45' 35"E 152.96'	301+52.96	2992549.734	667815.065
C135	301+52.96	2992549.734	667815.065	R=50.00' Δ=53°54'06" L=47.04' T=25.42'		302+00.00	2992590.185	667835.506

SYLVIA ST CONSTRUCTION BASELINE DATA

NUMBER	STARTING STATION	NORTHING	EASTING	CURVE DATA	LINE DATA	ENDING STATION	NORTHING	EASTING
L120	500+00.00	2990022.154	667763.050		N81° 46' 28"E 11.67'	500+11.67	2990023.824	667774.603
C132	500+11.67	2990023.824	667774.603	R=15.00' Δ=87°18'30" L=22.86' T=14.31'		500+34.53	2990040.116	667787.387
L121	500+34.53	2990040.116	667787.387		N5° 32' 02"W 153.54'	501+88.07	2990192.942	667772.581
C137	501+88.07	2990192.942	667772.581	R=10.00' Δ=91°09'21" L=15.91' T=10.20'		502+03.98	2990203.877	667781.771
L136	502+03.98	2990203.877	667781.771		N85° 37' 19"E 196.34'	504+00.32	2990218.865	667977.536

604531_HD(SC).DWG Plotted on 8-Oct-2015 12:58 PM

MAYNARD & ACTON
ASSABET RIVER RAIL TRAIL

STATE	FED. AID PROJ. NO.	SHEET NO.	TOTAL SHEETS
MA	CMAQ/STP-TE-002S(836)	28	230
PROJECT FILE NO.	604531		

CONSTRUCTION BASELINE TIES

ARRT CONSTRUCTION BASELINE DATA

NUMBER	STARTING STATION	NORTHING	EASTING	CURVE DATA	LINE DATA	ENDING STATION	NORTHING	EASTING
C70	167+88.02	2991565.438	668068.972	R=900.00' Δ=4°24'36" L=69.27' T=34.65'		168+57.29	2991633.727	668080.492
L54	168+57.29	2991633.727	668080.492		N11° 46' 50"E 250.97'	171+08.27	2991879.413	668131.732
C71	171+08.27	2991879.413	668131.732	R=100.00' Δ=73°29'22" L=128.26' T=74.66'		172+36.53	2991987.884	668081.234
C72	172+36.53	2991987.884	668081.234	R=60.00' Δ=79°16'54" L=83.02' T=49.71'		173+19.55	2992058.832	668052.471
L55	173+19.55	2992058.832	668052.471		N17° 34' 23"E 181.80'	175+01.36	2992232.152	668107.361
C90	175+01.36	2992232.152	668107.361	R=60.00' Δ=94°23'54" L=98.85' T=64.79'		176+00.21	2992308.688	668063.836

ARRT CONSTRUCTION BASELINE DATA

NUMBER	STARTING STATION	NORTHING	EASTING	CURVE DATA	LINE DATA	ENDING STATION	NORTHING	EASTING
L56	176+00.21	2992308.688	668063.836		N76° 49' 31"W 85.90'	176+86.11	2992328.266	667980.196
C91	176+86.11	2992328.266	667980.196	R=60.00' Δ=70°27'06" L=73.78' T=42.37'		177+59.89	2992380.026	667934.242
L57	177+59.89	2992380.026	667934.242		N6° 22' 26"W 215.28'	179+75.16	2992593.972	667910.344
C73	179+75.16	2992593.972	667910.344	R=350.00' Δ=9°24'04" L=57.43' T=28.78'		180+32.59	2992599.928	667967.398
L58	180+32.59	2992599.928	667967.398		N0° 39' 57"W 161.99'	181+94.58	2992761.908	667965.516

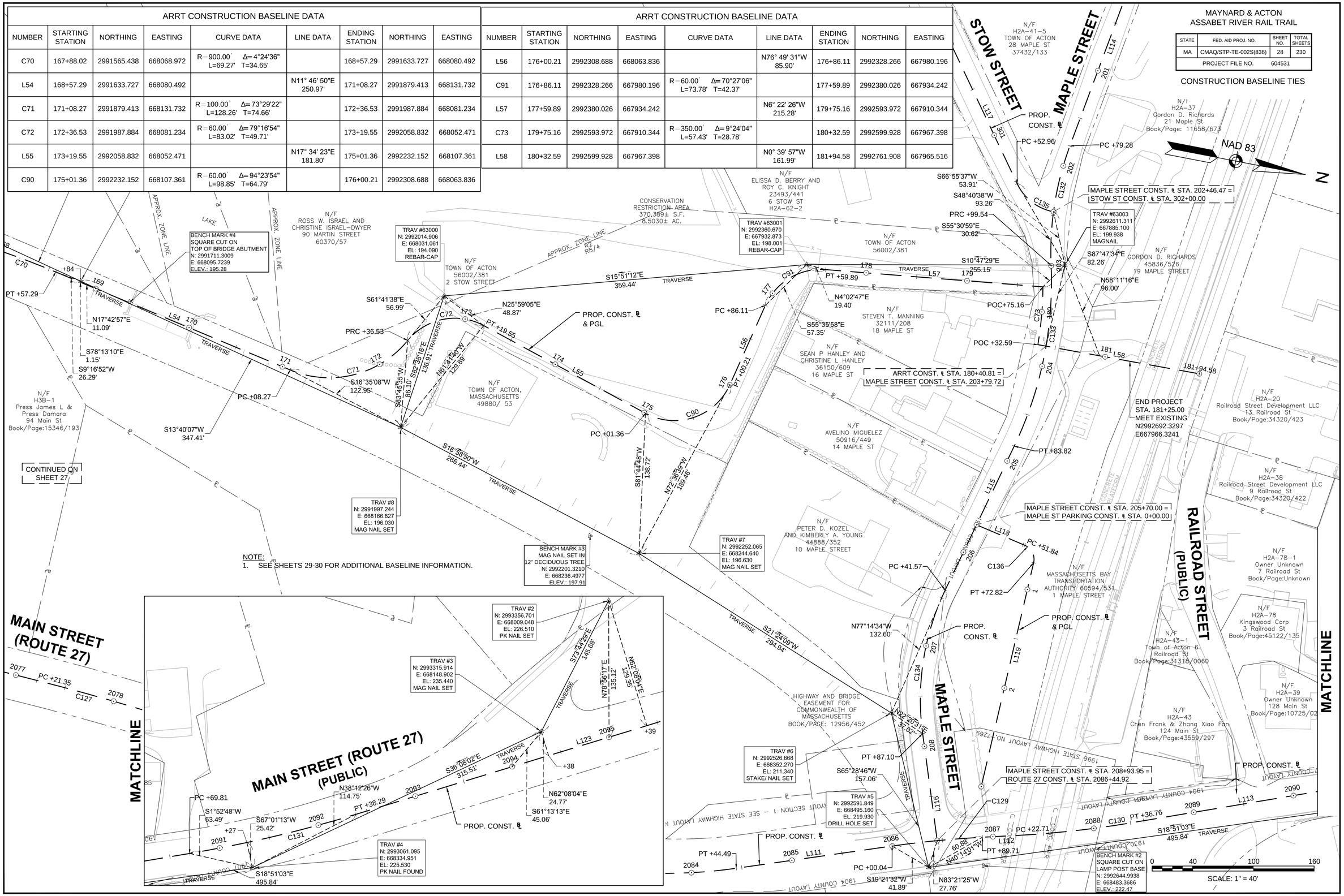

Plotted on 8-Oct-2015 12:58 PM

604531_HD(SC).DWG

MAYNARD & ACTON
ASSABET RIVER RAIL TRAIL

STATE	FED. AID PROJ. NO.	SHEET NO.	TOTAL SHEETS
MA	CMAQ/STP-TE-002S(836)	27	230
PROJECT FILE NO.	604531		

CONSTRUCTION BASELINE TIES

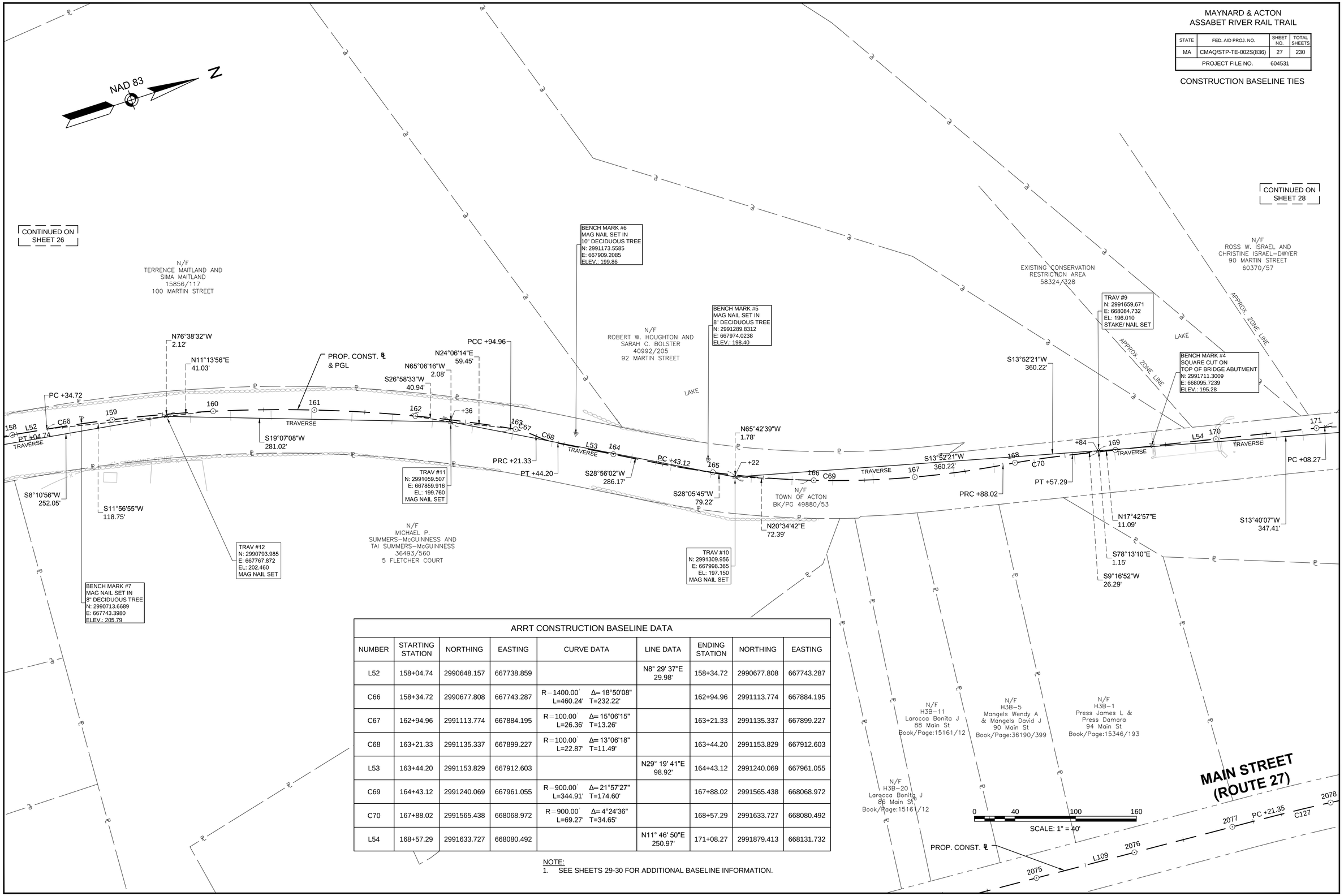

ARRT CONSTRUCTION BASELINE DATA

NUMBER	STARTING STATION	NORTHING	EASTING	CURVE DATA	LINE DATA	ENDING STATION	NORTHING	EASTING
L52	158+04.74	2990648.157	667738.859		N8° 29' 37"E 29.98'	158+34.72	2990677.808	667743.287
C66	158+34.72	2990677.808	667743.287	R=1400.00' Δ=18°50'08" L=460.24' T=232.22'		162+94.96	2991113.774	667884.195
C67	162+94.96	2991113.774	667884.195	R=100.00' Δ=15°06'15" L=26.36' T=13.26'		163+21.33	2991135.337	667899.227
C68	163+21.33	2991135.337	667899.227	R=100.00' Δ=13°06'18" L=22.87' T=11.49'		163+44.20	2991153.829	667912.603
L53	163+44.20	2991153.829	667912.603		N29° 19' 41"E 98.92'	164+43.12	2991240.069	667961.055
C69	164+43.12	2991240.069	667961.055	R=900.00' Δ=21°57'27" L=344.91' T=174.60'		167+88.02	2991565.438	668068.972
C70	167+88.02	2991565.438	668068.972	R=900.00' Δ=4°24'36" L=69.27' T=34.65'		168+57.29	2991633.727	668080.492
L54	168+57.29	2991633.727	668080.492		N11° 46' 50"E 250.97'	171+08.27	2991879.413	668131.732

NOTE:
1. SEE SHEETS 29-30 FOR ADDITIONAL BASELINE INFORMATION.

604531_HD(SC).DWG Plotted on 8-Oct-2015 12:57 PM

MAYNARD & ACTON
ASSABET RIVER RAIL TRAIL

STATE	FED. AID PROJ. NO.	SHEET NO.	TOTAL SHEETS
MA	CMAQ/STP-TE-002S(836)	26	230
PROJECT FILE NO.	604531		

CONSTRUCTION BASELINE TIES

ARRT CONSTRUCTION BASELINE DATA								
NUMBER	STARTING STATION	NORTHING	EASTING	CURVE DATA	LINE DATA	ENDING STATION	NORTHING	EASTING
C88	147+00.91	2989562.365	667881.272	R=2200.00' Δ=16°33'23" L=635.72' T=320.09'		153+36.63	2990181.248	667745.931
L50	153+36.63	2990181.248	667745.931		N4° 03' 27"W 62.65'	153+99.28	2990243.743	667741.498
C64	153+99.28	2990243.743	667741.498	R=1000.00' Δ=2°37'23" L=45.78' T=22.89'		154+45.06	2990289.319	667737.215
C65	154+45.06	2990289.319	667737.215	R=1000.00' Δ=5°08'58" L=89.88' T=44.97'		155+34.94	2990378.934	667730.782
L51	155+34.94	2990378.934	667730.782		N1° 31' 51"W 94.84'	156+29.78	2990473.745	667728.248
C89	156+29.78	2990473.745	667728.248	R=1000.00' Δ=10°01'28" L=174.96' T=87.70'		158+04.74	2990648.157	667738.859
L52	158+04.74	2990648.157	667738.859		N8° 29' 37"E 29.98'	158+34.72	2990677.808	667743.287
C66	158+34.72	2990677.808	667743.287	R=1400.00' Δ=18°50'08" L=460.24' T=232.22'		162+94.96	2991113.774	667884.195

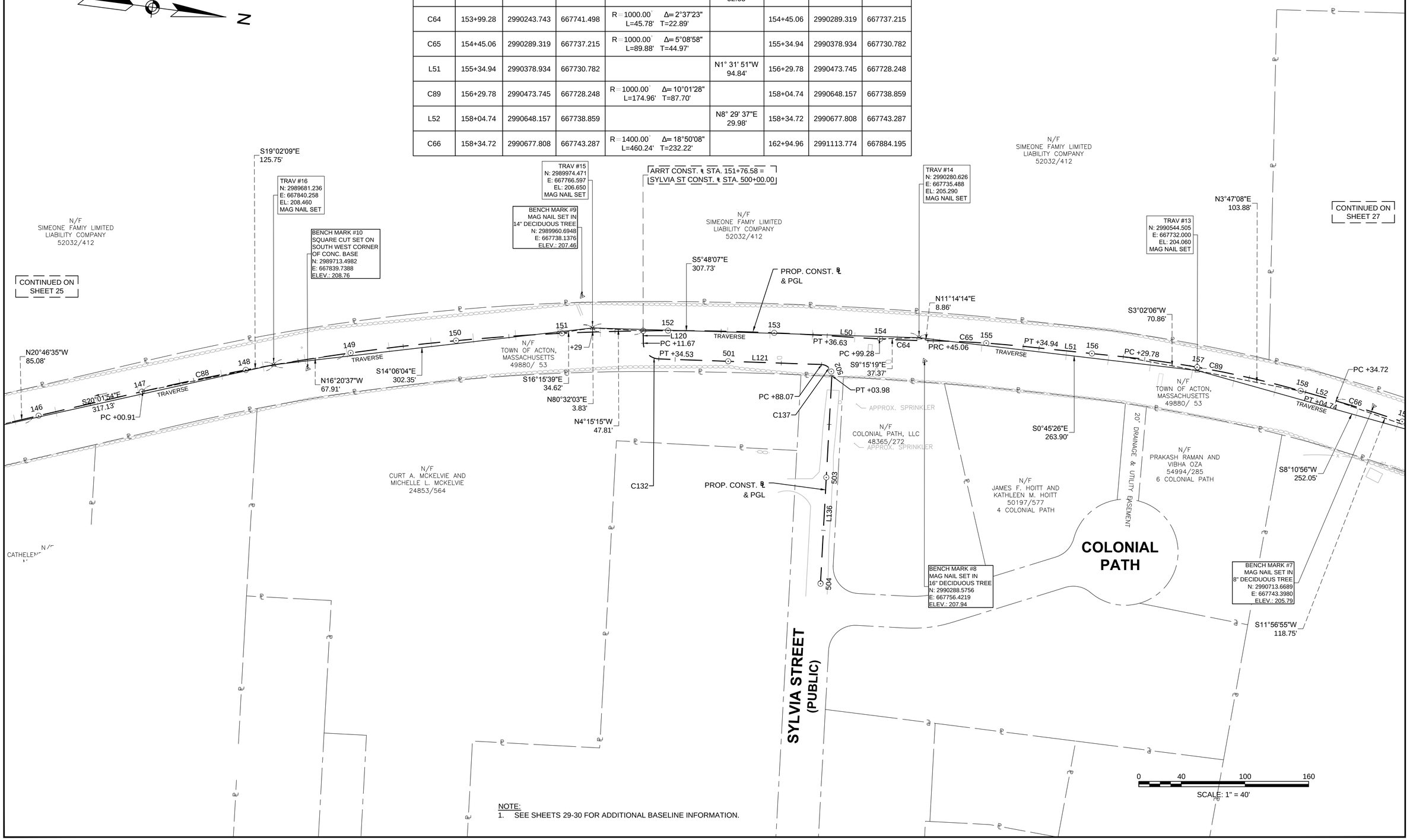

NOTE:
1. SEE SHEETS 29-30 FOR ADDITIONAL BASELINE INFORMATION.

604531_HD(SC).DWG Plotted on 8-Oct-2015 12:57 PM

MAYNARD & ACTON
ASSABET RIVER RAIL TRAIL

STATE	FED. AID PROJ. NO.	SHEET NO.	TOTAL SHEETS
MA	CMAQ/STP-TE-002S(836)	25	230
PROJECT FILE NO.	604531		

CONSTRUCTION BASELINE TIES

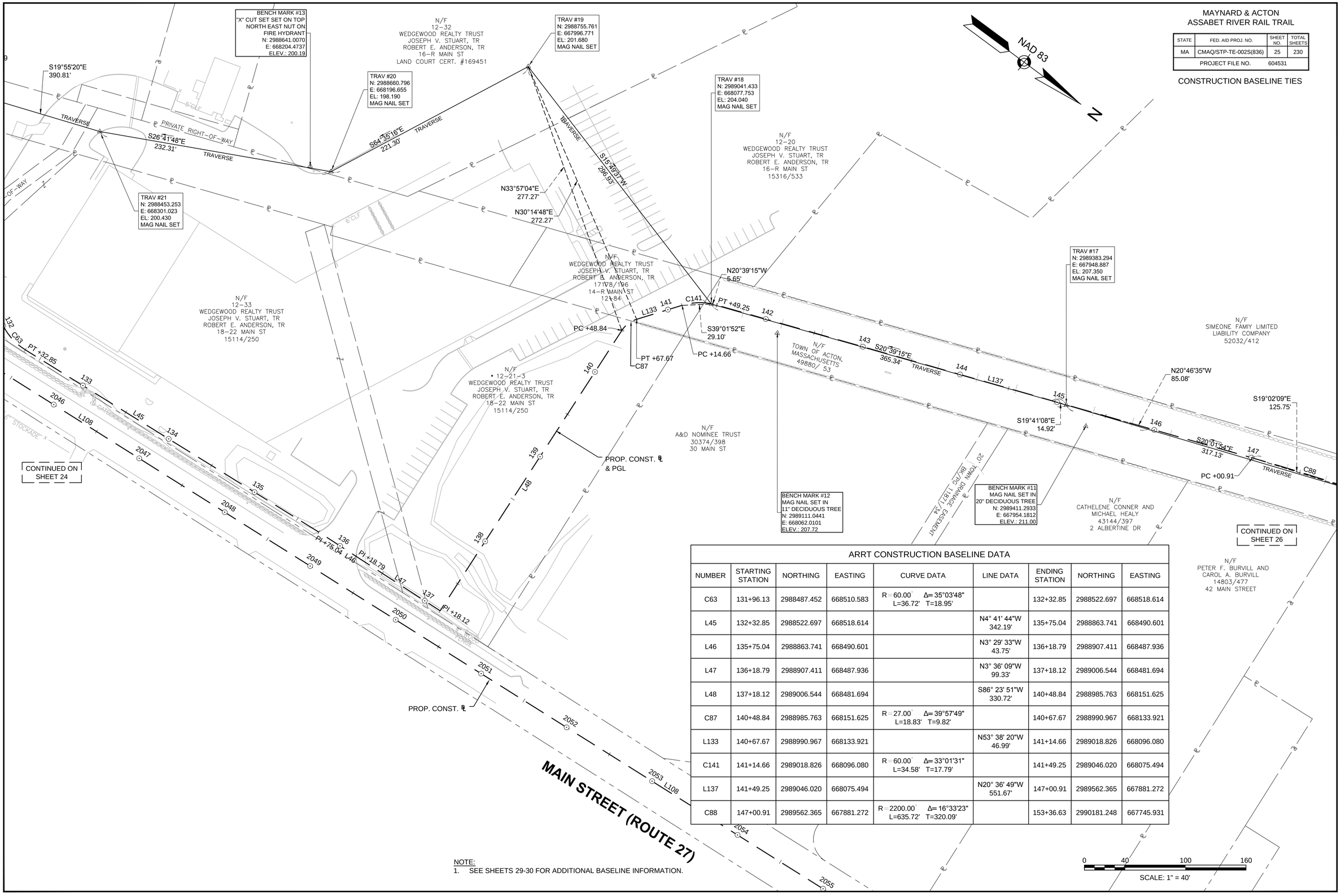

ARRT CONSTRUCTION BASELINE DATA

NUMBER	STARTING STATION	NORTHING	EASTING	CURVE DATA	LINE DATA	ENDING STATION	NORTHING	EASTING
C63	131+96.13	2988487.452	668510.583	R=60.00' Δ=35°03'48" L=36.72' T=18.95'		132+32.85	2988522.697	668518.614
L45	132+32.85	2988522.697	668518.614		N4° 41' 44"W 342.19'	135+75.04	2988863.741	668490.601
L46	135+75.04	2988863.741	668490.601		N3° 29' 33"W 43.75'	136+18.79	2988907.411	668487.936
L47	136+18.79	2988907.411	668487.936		N3° 36' 09"W 99.33'	137+18.12	2989006.544	668481.694
L48	137+18.12	2989006.544	668481.694		S86° 23' 51"W 330.72'	140+48.84	2988985.763	668151.625
C87	140+48.84	2988985.763	668151.625	R=27.00' Δ=39°57'49" L=18.83' T=9.82'		140+67.67	2988990.967	668133.921
L133	140+67.67	2988990.967	668133.921		N53° 38' 20"W 46.99'	141+14.66	2989018.826	668096.080
C141	141+14.66	2989018.826	668096.080	R=60.00' Δ=33°01'31" L=34.58' T=17.79'		141+49.25	2989046.020	668075.494
L137	141+49.25	2989046.020	668075.494		N20° 36' 49"W 551.67'	147+00.91	2989562.365	667881.272
C88	147+00.91	2989562.365	667881.272	R=2200.00' Δ=16°33'23" L=635.72' T=320.09'		153+36.63	2990181.248	667745.931

NOTE:
1. SEE SHEETS 29-30 FOR ADDITIONAL BASELINE INFORMATION.

604531_HD(SC).DWG Plotted on 8-Oct-2015 12:57 PM

MAYNARD & ACTON
ASSABET RIVER RAIL TRAIL

STATE	FED. AID PROJ. NO.	SHEET NO.	TOTAL SHEETS
MA	CMAQ/STP-TE-002S(836)	24	230
PROJECT FILE NO.	604531		

CONSTRUCTION BASELINE TIES

ARRT CONSTRUCTION BASELINE DATA

NUMBER	STARTING STATION	NORTHING	EASTING	CURVE DATA	LINE DATA	ENDING STATION	NORTHING	EASTING
C56	116+87.12	2987167.118	668649.255	R=4500.00' Δ=7°14'23" L=568.61' T=284.68'		122+55.73	2987725.522	668544.033
C57	122+55.73	2987725.522	668544.033	R=200.00' Δ=7°25'57" L=25.94' T=12.99'		122+81.67	2987750.179	668536.018
C58	122+81.67	2987750.179	668536.018	R=200.00' Δ=6°19'54" L=22.10' T=11.06'		123+03.78	2987771.120	668528.988
L41	123+03.78	2987771.120	668528.988		N15° 23' 32"W 110.88'	124+14.65	2987878.023	668499.557
C59	124+14.65	2987878.023	668499.557	R=2500.00' Δ=3°59'56" L=174.49' T=87.28'		125+89.14	2988044.500	668447.413
C60	125+89.14	2988044.500	668447.413	R=2000.00' Δ=2°26'58" L=85.50' T=42.76'		126+74.64	2988125.731	668420.759

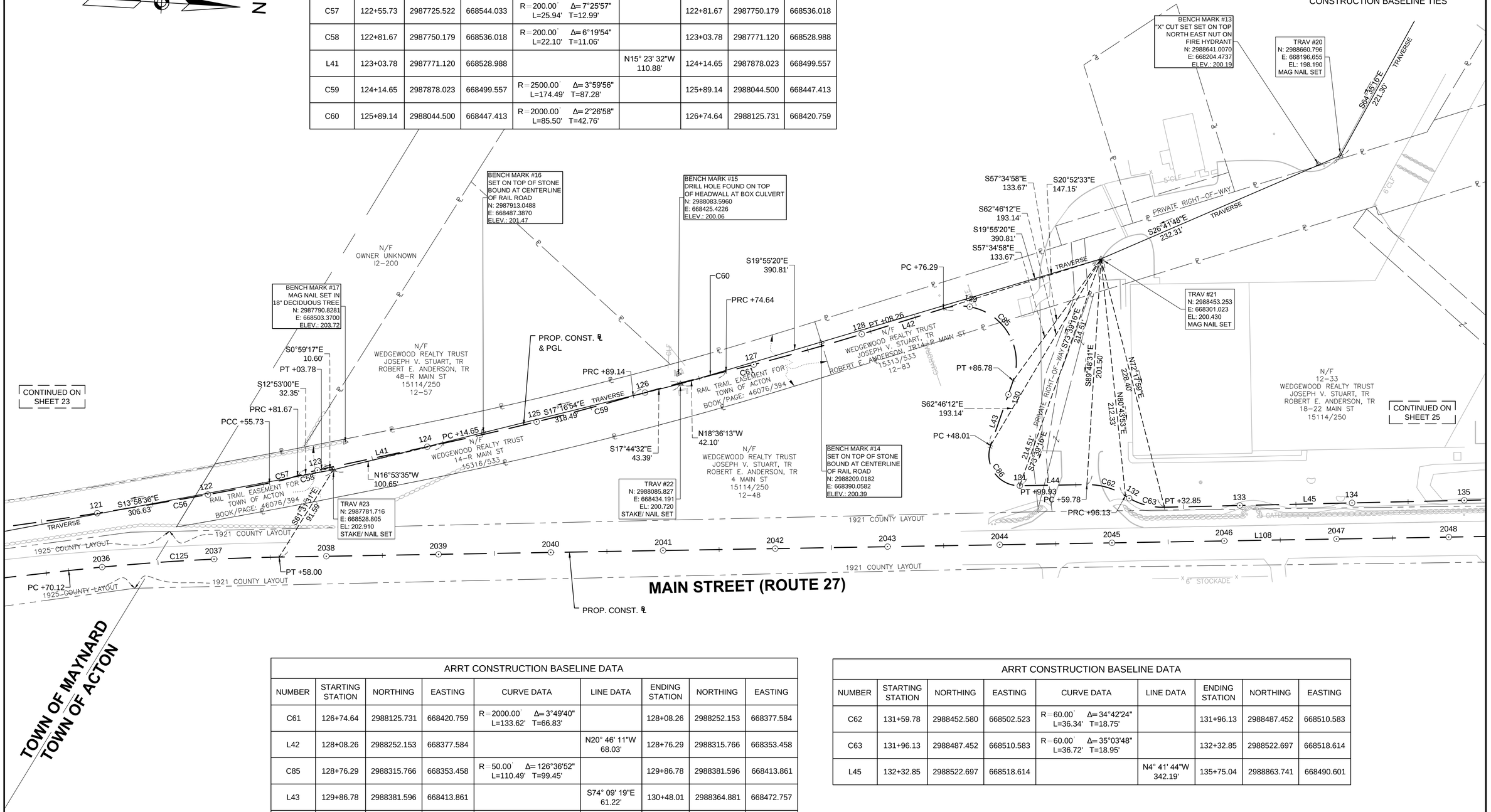

ARRT CONSTRUCTION BASELINE DATA

NUMBER	STARTING STATION	NORTHING	EASTING	CURVE DATA	LINE DATA	ENDING STATION	NORTHING	EASTING
C61	126+74.64	2988125.731	668420.759	R=2000.00' Δ=3°49'40" L=133.62' T=66.83'		128+08.26	2988252.153	668377.584
L42	128+08.26	2988252.153	668377.584		N20° 46' 11"W 68.03'	128+76.29	2988315.766	668353.458
C85	128+76.29	2988315.766	668353.458	R=50.00' Δ=126°36'52" L=110.49' T=99.45'		129+86.78	2988381.596	668413.861
L43	129+86.78	2988381.596	668413.861		S74° 09' 19"E 61.22'	130+48.01	2988364.881	668472.757
C86	130+48.01	2988364.881	668472.757	R=27.00' Δ=110°11'01" L=51.92' T=38.69'		130+99.93	2988392.897	668507.051
L44	130+99.93	2988392.897	668507.051		N4° 20' 20"W 59.85'	131+59.78	2988452.580	668502.523

ARRT CONSTRUCTION BASELINE DATA

NUMBER	STARTING STATION	NORTHING	EASTING	CURVE DATA	LINE DATA	ENDING STATION	NORTHING	EASTING
C62	131+59.78	2988452.580	668502.523	R=60.00' Δ=34°42'24" L=36.34' T=18.75'		131+96.13	2988487.452	668510.583
C63	131+96.13	2988487.452	668510.583	R=60.00' Δ=35°03'48" L=36.72' T=18.95'		132+32.85	2988522.697	668518.614
L45	132+32.85	2988522.697	668518.614		N4° 41' 44"W 342.19'	135+75.04	2988863.741	668490.601

0 40 100 160
SCALE: 1" = 40'

NOTE:
1. SEE SHEETS 29-30 FOR ADDITIONAL BASELINE INFORMATION.

604531_HD(SC).DWG Plotted on 8-Oct-2015 12:57 PM

MAYNARD & ACTON
ASSABET RIVER RAIL TRAIL

STATE	FED. AID PROJ. NO.	SHEET NO.	TOTAL SHEETS
MA	CMAQ/STP-TE-002S(836)	23	230
PROJECT FILE NO.	604531		

CONSTRUCTION BASELINE TIES

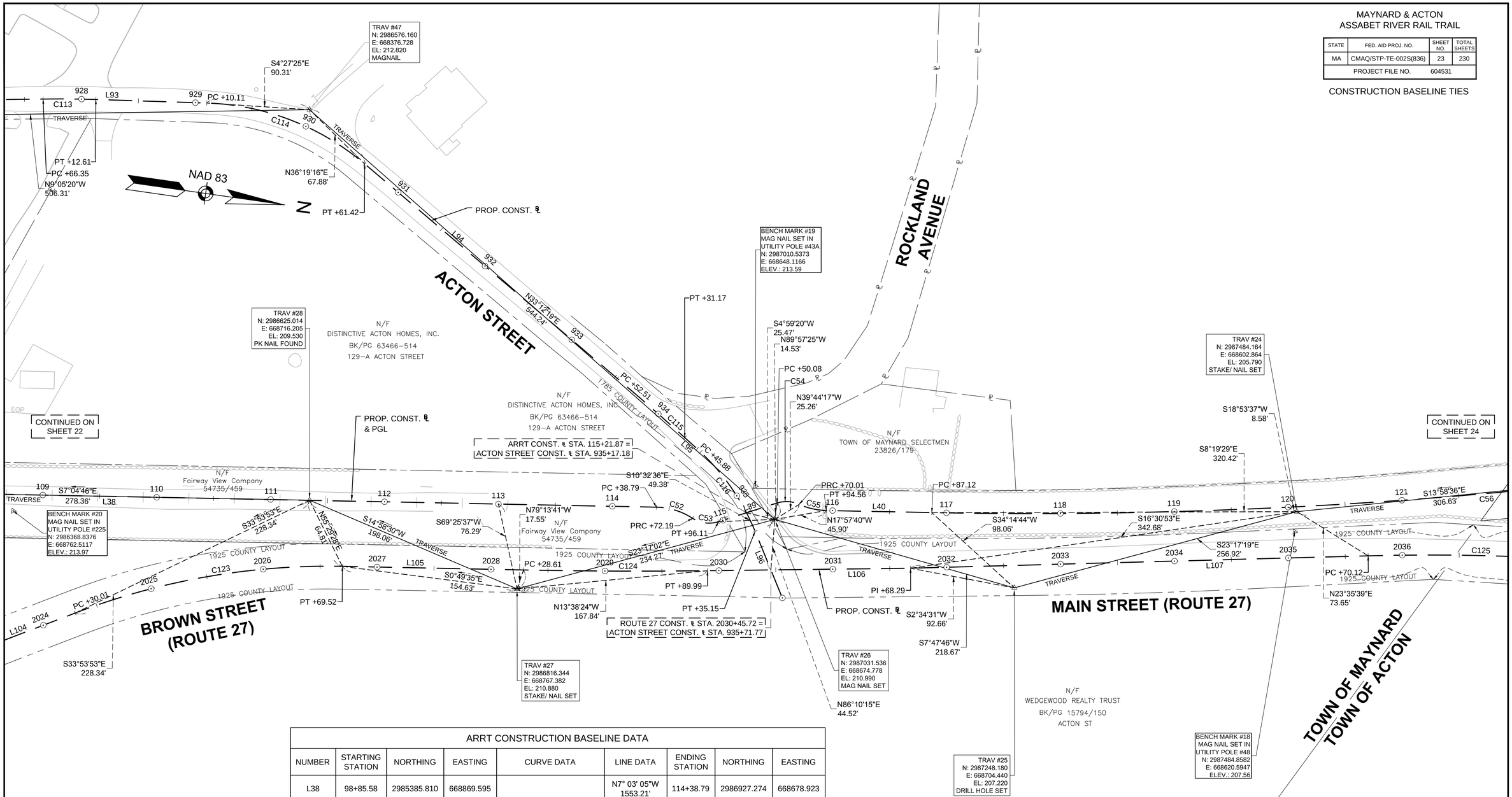

ARRT CONSTRUCTION BASELINE DATA								
NUMBER	STARTING STATION	NORTHING	EASTING	CURVE DATA	LINE DATA	ENDING STATION	NORTHING	EASTING
L38	98+85.58	2985385.810	668869.595		N7° 03' 05"W 1553.21'	114+38.79	2986927.274	668678.923
C52	114+38.79	2986927.274	668678.923	R=60.00' Δ=31°54'05" L=33.41' T=17.15'		114+72.19	2986959.854	668684.024
C53	114+72.19	2986959.854	668684.024	R=27.00' Δ=50°44'36" L=23.91' T=12.80'		114+96.11	2986982.992	668683.813
L39	114+96.11	2986982.992	668683.813		N25° 53' 36"W 53.97'	115+50.08	2987031.547	668660.243
C54	115+50.08	2987031.547	668660.243	R=27.00' Δ=42°17'24" L=19.93' T=10.44'		115+70.01	2987050.959	668658.631
C55	115+70.01	2987050.959	668658.631	R=60.00' Δ=23°26'53" L=24.55' T=12.45'		115+94.56	2987075.262	668660.617
L40	115+94.56	2987075.262	668660.617		N7° 03' 05"W 92.56'	116+87.12	2987167.118	668649.255
C56	116+87.12	2987167.118	668649.255	R=4500.00' Δ=7°14'23" L=568.61' T=284.68'		122+55.73	2987725.522	668544.033

NOTE:
1. SEE SHEETS 29-30 FOR ADDITIONAL BASELINE INFORMATION.

604531_HD(SC).DWG Plotted on 8-Oct-2015 12:57 PM

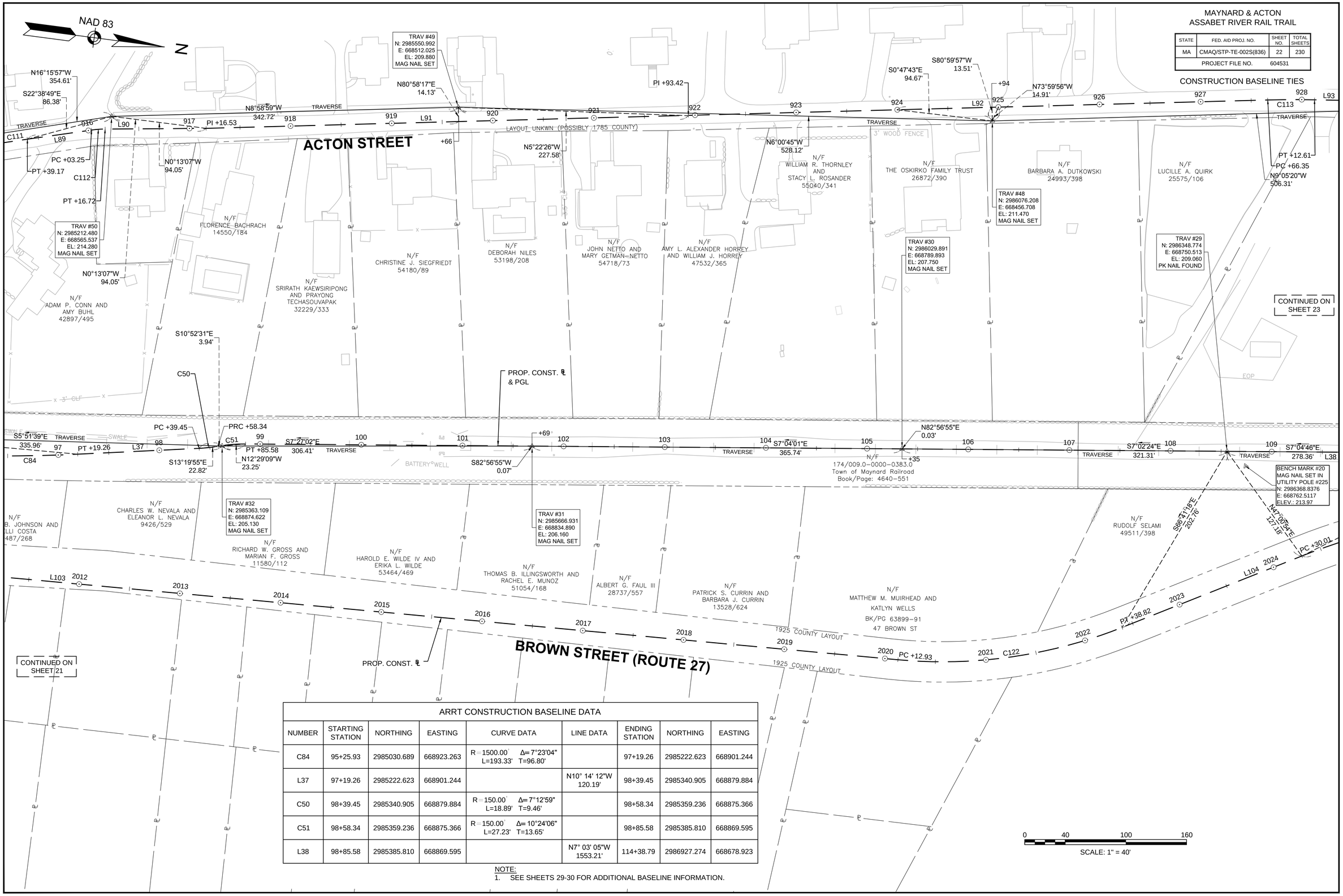

ARRT CONSTRUCTION BASELINE DATA

NUMBER	STARTING STATION	NORTHING	EASTING	CURVE DATA	LINE DATA	ENDING STATION	NORTHING	EASTING
C84	95+25.93	2985030.689	668923.263	R=1500.00' Δ=7°23'04" L=193.33' T=96.80'		97+19.26	2985222.623	668901.244
L37	97+19.26	2985222.623	668901.244		N10° 14' 12"W 120.19'	98+39.45	2985340.905	668879.884
C50	98+39.45	2985340.905	668879.884	R=150.00' Δ=7°12'59" L=18.89' T=9.46'		98+58.34	2985359.236	668875.366
C51	98+58.34	2985359.236	668875.366	R=150.00' Δ=10°24'06" L=27.23' T=13.65'		98+85.58	2985385.810	668869.595
L38	98+85.58	2985385.810	668869.595		N7° 03' 05"W 1553.21'	114+38.79	2986927.274	668678.923

NOTE:
1. SEE SHEETS 29-30 FOR ADDITIONAL BASELINE INFORMATION.

MAYNARD & ACTON
ASSABET RIVER RAIL TRAIL

STATE	FED. AID PROJ. NO.	SHEET NO.	TOTAL SHEETS
MA	CMAQ/STP-TE-002S(836)	21	230
PROJECT FILE NO.	604531		

CONSTRUCTION BASELINE TIES

ARRT CONSTRUCTION BASELINE DATA								
NUMBER	STARTING STATION	NORTHING	EASTING	CURVE DATA	LINE DATA	ENDING STATION	NORTHING	EASTING
L29	84+25.21	2983956.911	668983.695		N3° 25' 10"W 85.10'	85+10.30	2984041.855	668978.620
C80	85+10.30	2984041.855	668978.620	R=100.00' Δ=22°42'17" L=39.63' T=20.08'		85+49.93	2984079.923	668968.582
L30	85+49.93	2984079.923	668968.582		N26° 07' 27"W 19.91'	85+69.84	2984097.798	668959.815
C81	85+69.84	2984097.798	668959.815	R=27.00' Δ=80°25'17" L=37.90' T=22.83'		86+07.74	2984131.612	668968.300
L31	86+07.74	2984131.612	668968.300		N54° 17' 50"E 26.37'	86+34.11	2984147.000	668989.712
L32	86+34.11	2984147.000	668989.712		N2° 48' 21"W 206.53'	88+40.64	2984353.284	668979.602

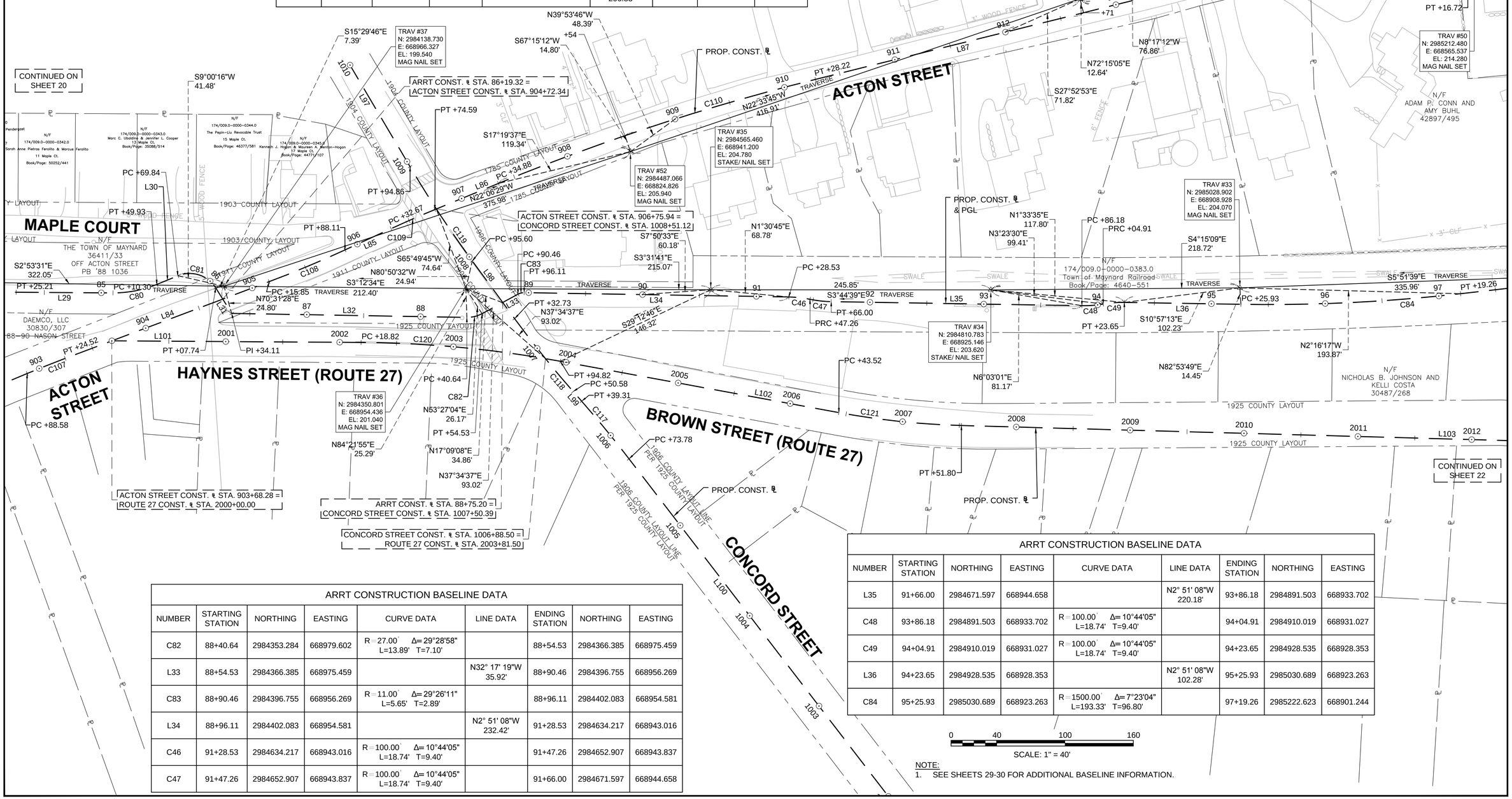

ARRT CONSTRUCTION BASELINE DATA								
NUMBER	STARTING STATION	NORTHING	EASTING	CURVE DATA	LINE DATA	ENDING STATION	NORTHING	EASTING
C82	88+40.64	2984353.284	668979.602	R=27.00' Δ=29°28'58" L=13.89' T=7.10'		88+54.53	2984366.385	668975.459
L33	88+54.53	2984366.385	668975.459		N32° 17' 19"W 35.92'	88+90.46	2984396.755	668956.269
C83	88+90.46	2984396.755	668956.269	R=11.00' Δ=29°26'11" L=5.65' T=2.89'		88+96.11	2984402.083	668954.581
L34	88+96.11	2984402.083	668954.581		N2° 51' 08"W 232.42'	91+28.53	2984634.217	668943.016
C46	91+28.53	2984634.217	668943.016	R=100.00' Δ=10°44'05" L=18.74' T=9.40'		91+47.26	2984652.907	668943.837
C47	91+47.26	2984652.907	668943.837	R=100.00' Δ=10°44'05" L=18.74' T=9.40'		91+66.00	2984671.597	668944.658

ARRT CONSTRUCTION BASELINE DATA								
NUMBER	STARTING STATION	NORTHING	EASTING	CURVE DATA	LINE DATA	ENDING STATION	NORTHING	EASTING
L35	91+66.00	2984671.597	668944.658		N2° 51' 08"W 220.18'	93+86.18	2984891.503	668933.702
C48	93+86.18	2984891.503	668933.702	R=100.00' Δ=10°44'05" L=18.74' T=9.40'		94+04.91	2984910.019	668931.027
C49	94+04.91	2984910.019	668931.027	R=100.00' Δ=10°44'05" L=18.74' T=9.40'		94+23.65	2984928.535	668928.353
L36	94+23.65	2984928.535	668928.353		N2° 51' 08"W 102.28'	95+25.93	2985030.689	668923.263
C84	95+25.93	2985030.689	668923.263	R=1500.00' Δ=7°23'04" L=193.33' T=96.80'		97+19.26	2985222.623	668901.244

0 40 100 160
SCALE: 1" = 40'

NOTE:
1. SEE SHEETS 29-30 FOR ADDITIONAL BASELINE INFORMATION.

604531_HD(SC).DWG Plotted on 8-Oct-2015 12:56 PM

MAYNARD & ACTON
ASSABET RIVER RAIL TRAIL

STATE	FED. AID PROJ. NO.	SHEET NO.	TOTAL SHEETS
MA	CMAQ/STP-TE-002S(836)	20	230
PROJECT FILE NO.	604531		

CONSTRUCTION BASELINE TIES

CONTINUED ON SHEET 21

CONTINUED ON SHEET 19

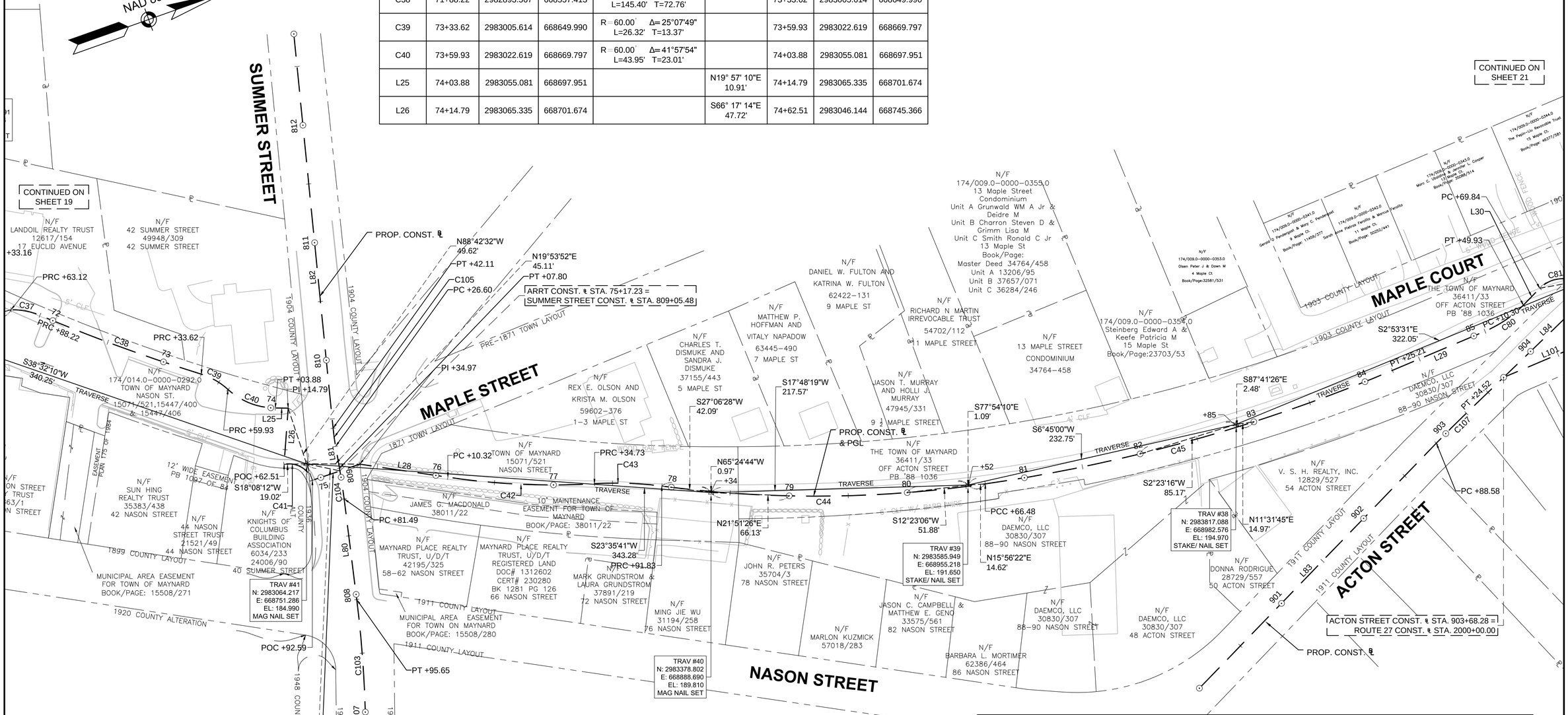

ARRT CONSTRUCTION BASELINE DATA

NUMBER	STARTING STATION	NORTHING	EASTING	CURVE DATA	LINE DATA	ENDING STATION	NORTHING	EASTING
C37	71+63.12	2982872.072	668544.822	R=60.00' Δ=23°57'46" L=25.09' T=12.73'		71+88.22	2982893.567	668557.413
C38	71+88.22	2982893.567	668557.413	R=1500.00' Δ=5°33'14" L=145.40' T=72.76'		73+33.62	2983005.614	668649.990
C39	73+33.62	2983005.614	668649.990	R=60.00' Δ=25°07'49" L=26.32' T=13.37'		73+59.93	2983022.619	668669.797
C40	73+59.93	2983022.619	668669.797	R=60.00' Δ=41°57'54" L=43.95' T=23.01'		74+03.88	2983055.081	668697.951
L25	74+03.88	2983055.081	668697.951		N19° 57' 10"E 10.91'	74+14.79	2983065.335	668701.674
L26	74+14.79	2983065.335	668701.674		S66° 17' 14"E 47.72'	74+62.51	2983046.144	668745.366

ARRT CONSTRUCTION BASELINE DATA

NUMBER	STARTING STATION	NORTHING	EASTING	CURVE DATA	LINE DATA	ENDING STATION	NORTHING	EASTING
C41	74+62.51	2983046.144	668745.366	R=21.00' Δ=82°03'46" L=30.08' T=18.28'		74+92.59	2983064.256	668766.154
L27	74+92.59	2983064.256	668766.154		N0° 39' 19"E 42.38'	75+34.97	2983106.635	668766.639
L28	75+34.97	2983106.635	668766.639		N27° 58' 23"E 75.35'	76+10.32	2983173.184	668801.984
C42	76+10.32	2983173.184	668801.984	R=600.00' Δ=11°52'49" L=124.41' T=62.43'		77+34.73	2983288.302	668848.571
C43	77+34.73	2983288.302	668848.571	R=300.00' Δ=10°54'19" L=57.10' T=28.64'		77+91.83	2983341.332	668869.509
C44	77+91.83	2983341.332	668869.509	R=1000.00' Δ=15°44'12" L=274.65' T=138.20'		80+66.48	2983600.005	668959.233

ARRT CONSTRUCTION BASELINE DATA

NUMBER	STARTING STATION	NORTHING	EASTING	CURVE DATA	LINE DATA	ENDING STATION	NORTHING	EASTING
C45	80+66.48	2983600.005	668959.233	R=1400.00' Δ=14°40'52" L=358.72' T=180.35'		84+25.21	2983956.911	668983.695
L29	84+25.21	2983956.911	668983.695		N3° 25' 10"W 85.10'	85+10.30	2984041.855	668978.620
C80	85+10.30	2984041.855	668978.620	R=100.00' Δ=22°42'17" L=39.63' T=20.08'		85+49.93	2984079.923	668968.582
L30	85+49.93	2984079.923	668968.582		N26° 07' 27"W 19.91'	85+69.84	2984097.798	668959.815
C81	85+69.84	2984097.798	668959.815	R=27.00' Δ=80°25'17" L=37.90' T=22.83'		86+07.74	2984131.612	668968.300

NOTE:
1. SEE SHEETS 29-30 FOR ADDITIONAL BASELINE INFORMATION.

0 40 100 160
SCALE: 1" = 40'

604531_HD(SC).DWG Plotted on 8-Oct-2015 12:56 PM

MAYNARD & ACTON
ASSABET RIVER RAIL TRAIL

STATE	FED. AID PROJ. NO.	SHEET NO.	TOTAL SHEETS
MA	CMAQ/STP-TE-002S(836)	19	230
PROJECT FILE NO.	604531		

CONSTRUCTION BASELINE TIES

604531_HD(SC).DWG Plotted on 8-Oct-2015 12:56 PM

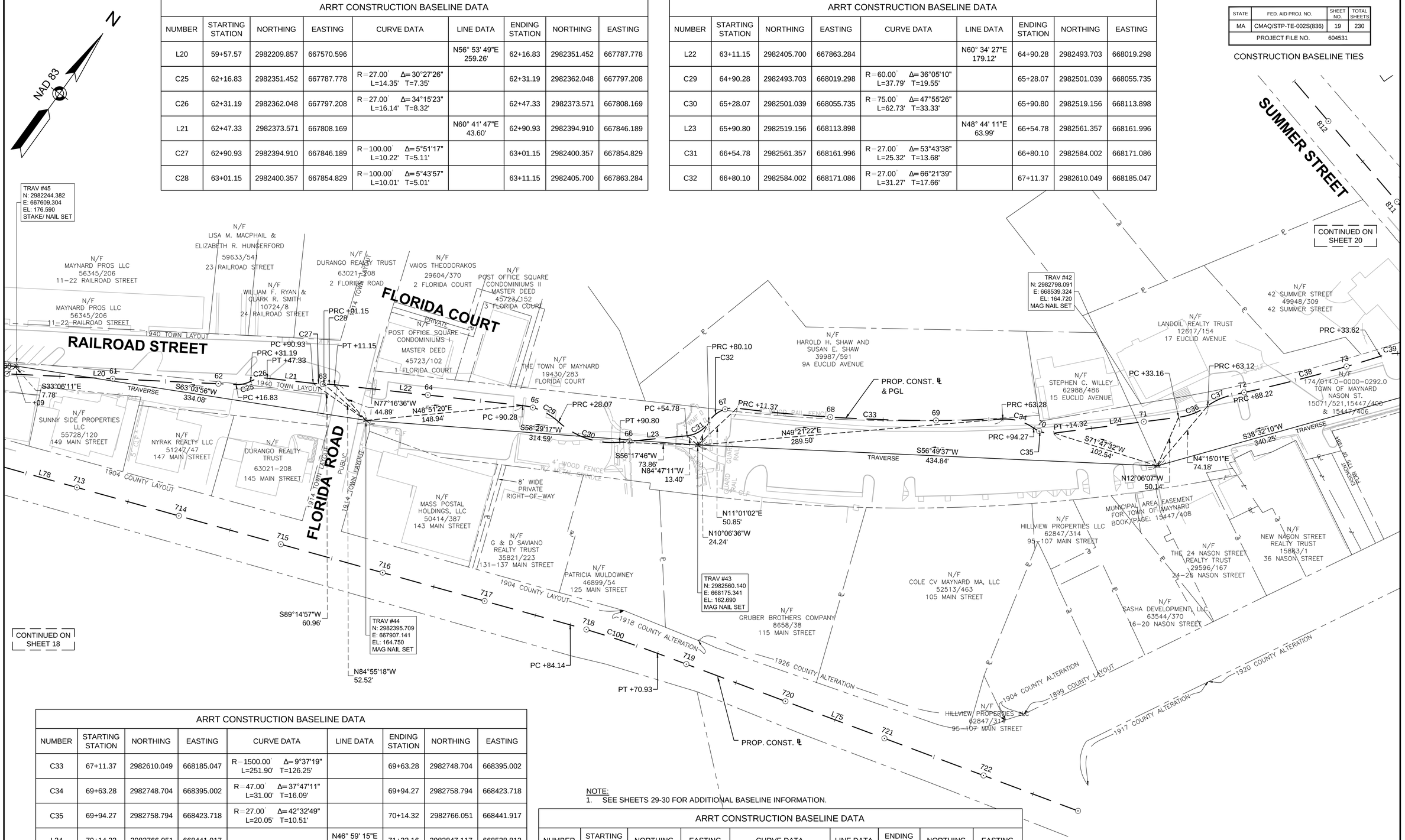

ARRT CONSTRUCTION BASELINE DATA

NUMBER	STARTING STATION	NORTHING	EASTING	CURVE DATA	LINE DATA	ENDING STATION	NORTHING	EASTING
L20	59+57.57	2982209.857	667570.596		N56° 53' 49"E 259.26'	62+16.83	2982351.452	667787.778
C25	62+16.83	2982351.452	667787.778	R=27.00' Δ=30°27'26" L=14.35' T=7.35'		62+31.19	2982362.048	667797.208
C26	62+31.19	2982362.048	667797.208	R=27.00' Δ=34°15'23" L=16.14' T=8.32'		62+47.33	2982373.571	667808.169
L21	62+47.33	2982373.571	667808.169		N60° 41' 47"E 43.60'	62+90.93	2982394.910	667846.189
C27	62+90.93	2982394.910	667846.189	R=100.00' Δ=5°51'17" L=10.22' T=5.11'		63+01.15	2982400.357	667854.829
C28	63+01.15	2982400.357	667854.829	R=100.00' Δ=5°43'57" L=10.01' T=5.01'		63+11.15	2982405.700	667863.284

ARRT CONSTRUCTION BASELINE DATA

NUMBER	STARTING STATION	NORTHING	EASTING	CURVE DATA	LINE DATA	ENDING STATION	NORTHING	EASTING
L22	63+11.15	2982405.700	667863.284		N60° 34' 27"E 179.12'	64+90.28	2982493.703	668019.298
C29	64+90.28	2982493.703	668019.298	R=60.00' Δ=36°05'10" L=37.79' T=19.55'		65+28.07	2982501.039	668055.735
C30	65+28.07	2982501.039	668055.735	R=75.00' Δ=47°55'26" L=62.73' T=33.33'		65+90.80	2982519.156	668113.898
L23	65+90.80	2982519.156	668113.898		N48° 44' 11"E 63.99'	66+54.78	2982561.357	668161.996
C31	66+54.78	2982561.357	668161.996	R=27.00' Δ=53°43'38" L=25.32' T=13.68'		66+80.10	2982584.002	668171.086
C32	66+80.10	2982584.002	668171.086	R=27.00' Δ=66°21'39" L=31.27' T=17.66'		67+11.37	2982610.049	668185.047

ARRT CONSTRUCTION BASELINE DATA

NUMBER	STARTING STATION	NORTHING	EASTING	CURVE DATA	LINE DATA	ENDING STATION	NORTHING	EASTING
C33	67+11.37	2982610.049	668185.047	R=1500.00' Δ=9°37'19" L=251.90' T=126.25'		69+63.28	2982748.704	668395.002
C34	69+63.28	2982748.704	668395.002	R=47.00' Δ=37°47'11" L=31.00' T=16.09'		69+94.27	2982758.794	668423.718
C35	69+94.27	2982758.794	668423.718	R=27.00' Δ=42°32'49" L=20.05' T=10.51'		70+14.32	2982766.051	668441.917
L24	70+14.32	2982766.051	668441.917		N46° 59' 15"E 118.84'	71+33.16	2982847.117	668528.812
C36	71+33.16	2982847.117	668528.812	R=60.00' Δ=28°36'31" L=29.96' T=15.30'		71+63.12	2982872.072	668544.822
C37	71+63.12	2982872.072	668544.822	R=60.00' Δ=23°57'46" L=25.09' T=12.73'		71+88.22	2982893.567	668557.413

NOTE:
1. SEE SHEETS 29-30 FOR ADDITIONAL BASELINE INFORMATION.

ARRT CONSTRUCTION BASELINE DATA

NUMBER	STARTING STATION	NORTHING	EASTING	CURVE DATA	LINE DATA	ENDING STATION	NORTHING	EASTING
C38	71+88.22	2982893.567	668557.413	R=1500.00' Δ=5°33'14" L=145.40' T=72.76'		73+33.62	2983005.614	668649.990
C39	73+33.62	2983005.614	668649.990	R=60.00' Δ=25°07'49" L=26.32' T=13.37'		73+59.93	2983022.619	668669.797

MAYNARD & ACTON
ASSABET RIVER RAIL TRAIL

STATE	FED. AID PROJ. NO.	SHEET NO.	TOTAL SHEETS
MA	CMAQ/STP-TE-002S(836)	18	230
PROJECT FILE NO.	604531		

CONSTRUCTION BASELINE TIES

604531_HD(SC).DWG Plotted on 8-Oct-2015 12:56 PM

ARRT CONSTRUCTION BASELINE DATA

NUMBER	STARTING STATION	NORTHING	EASTING	CURVE DATA	LINE DATA	ENDING STATION	NORTHING	EASTING
L13	45+84.97	2981483.298	666565.038		N55° 03' 17"E 396.42'	49+81.39	2981710.367	666889.984
L14	49+81.39	2981710.367	666889.984		N34° 56' 14"W 91.71'	50+73.10	2981785.546	666837.465
L15	50+73.10	2981785.546	666837.465		N62° 33' 35"E 268.15'	53+41.25	2981909.115	667075.444
C21	53+41.25	2981909.115	667075.444	R=1000.00' Δ=6°17'55" L=109.93' T=55.02'		54+51.18	2981965.029	667170.028
C22	54+51.18	2981965.029	667170.028	R=491.00' Δ=19°14'00" L=164.82' T=83.19'		56+16.00	2982032.073	667319.751
L16	56+16.00	2982032.073	667319.751		N75° 29' 40"E 28.29'	56+44.29	2982039.159	667347.139
L17	56+44.29	2982039.159	667347.139		N14° 30' 20"W 44.00'	56+88.29	2982081.756	667336.118

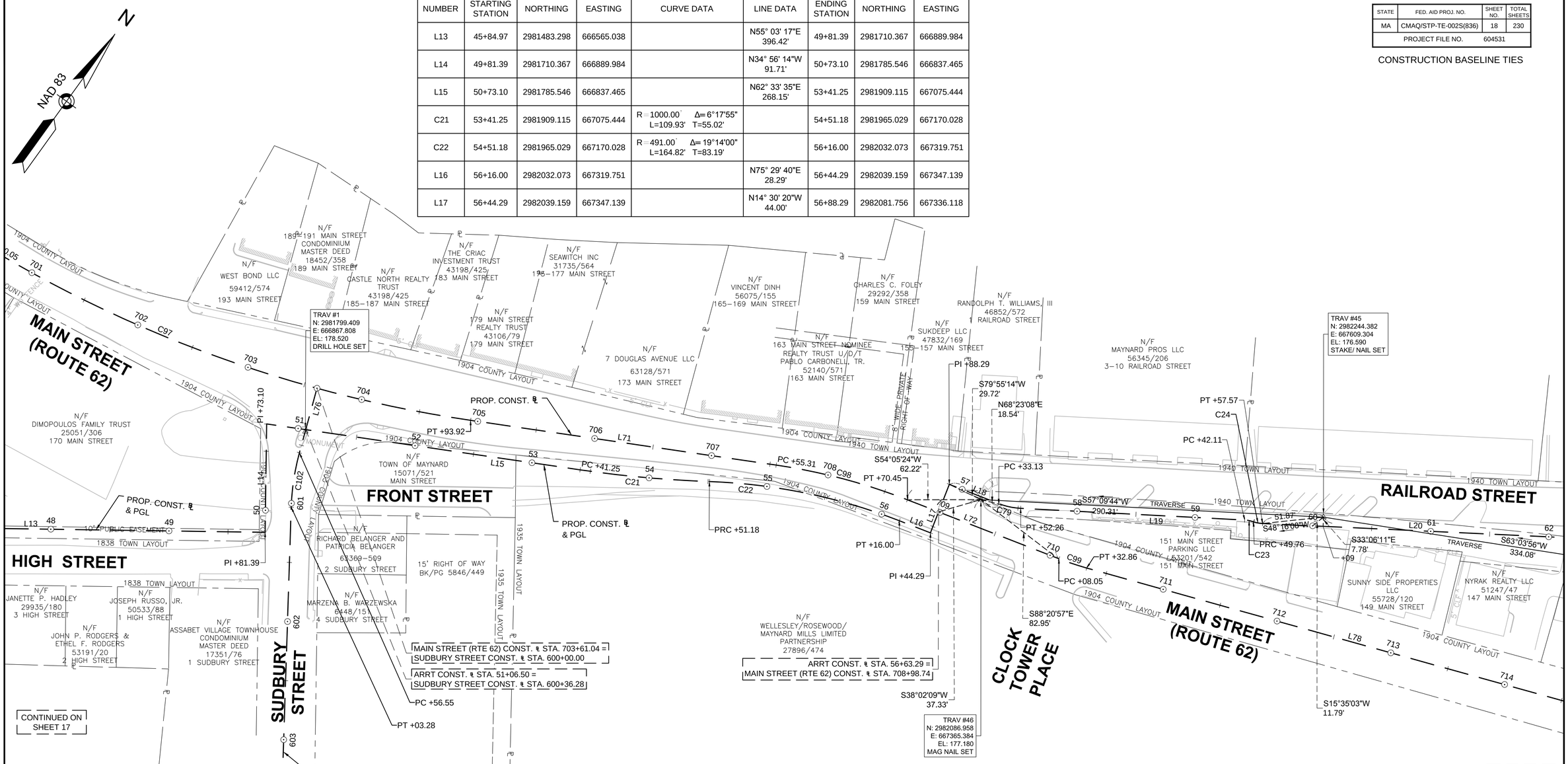

ARRT CONSTRUCTION BASELINE DATA

NUMBER	STARTING STATION	NORTHING	EASTING	CURVE DATA	LINE DATA	ENDING STATION	NORTHING	EASTING
L18	56+88.29	2982081.756	667336.118		N75° 29' 40"E 44.84'	57+33.13	2982092.987	667379.529
C79	57+33.13	2982092.987	667379.529	R=60.00' Δ=18°16'22" L=19.14' T=9.65'		57+52.26	2982100.629	667396.983
L19	57+52.26	2982100.629	667396.983		N57° 13' 18"E 189.84'	59+42.11	2982203.407	667556.597
C23	59+42.11	2982203.407	667556.597	R=27.00' Δ=16°14'51" L=7.66' T=3.85'		59+49.76	2982206.590	667563.533
C24	59+49.76	2982206.590	667563.533	R=27.00' Δ=16°34'20" L=7.81' T=3.93'		59+57.57	2982209.857	667570.596
L20	59+57.57	2982209.857	667570.596		N56° 53' 49"E 259.26'	62+16.83	2982351.452	667787.778

0 40 100 160
SCALE: 1" = 40'

NOTE:
1. SEE SHEETS 29-30 FOR ADDITIONAL BASELINE INFORMATION.

MAYNARD & ACTON
ASSABET RIVER RAIL TRAIL

STATE	FED. AID PROJ. NO.	SHEET NO.	TOTAL SHEETS
MA	CMAQ/STP-TE-002S(836)	17	230
PROJECT FILE NO.	604531		

CONSTRUCTION BASELINE TIES

ARRT CONSTRUCTION BASELINE DATA

NUMBER	STARTING STATION	NORTHING	EASTING	CURVE DATA	LINE DATA	ENDING STATION	NORTHING	EASTING
L10	36+09.69	2981041.035	665696.775		N61° 18' 23"E 340.07'	39+49.76	2981204.310	665995.081
C76	39+49.76	2981204.310	665995.081	R=1000.00' Δ=1°55'40" L=33.65' T=16.83'		39+83.40	2981219.966	666024.862
L11	39+83.40	2981219.966	666024.862		N63° 14' 03"E 413.59'	43+97.00	2981406.224	666394.138
C77	43+97.00	2981406.224	666394.138	R=500.00' Δ=6°23'43" L=55.81' T=27.93'		44+52.80	2981428.528	666445.266
L12	44+52.80	2981428.528	666445.266		N69° 37' 46"E 55.85'	45+08.66	2981447.969	666497.626
C78	45+08.66	2981447.969	666497.626	R=300.00' Δ=14°34'30" L=76.31' T=38.36'		45+84.97	2981483.298	666565.038
L13	45+84.97	2981483.298	666565.038		N55° 03' 17"E 396.42'	49+81.39	2981710.367	666889.984

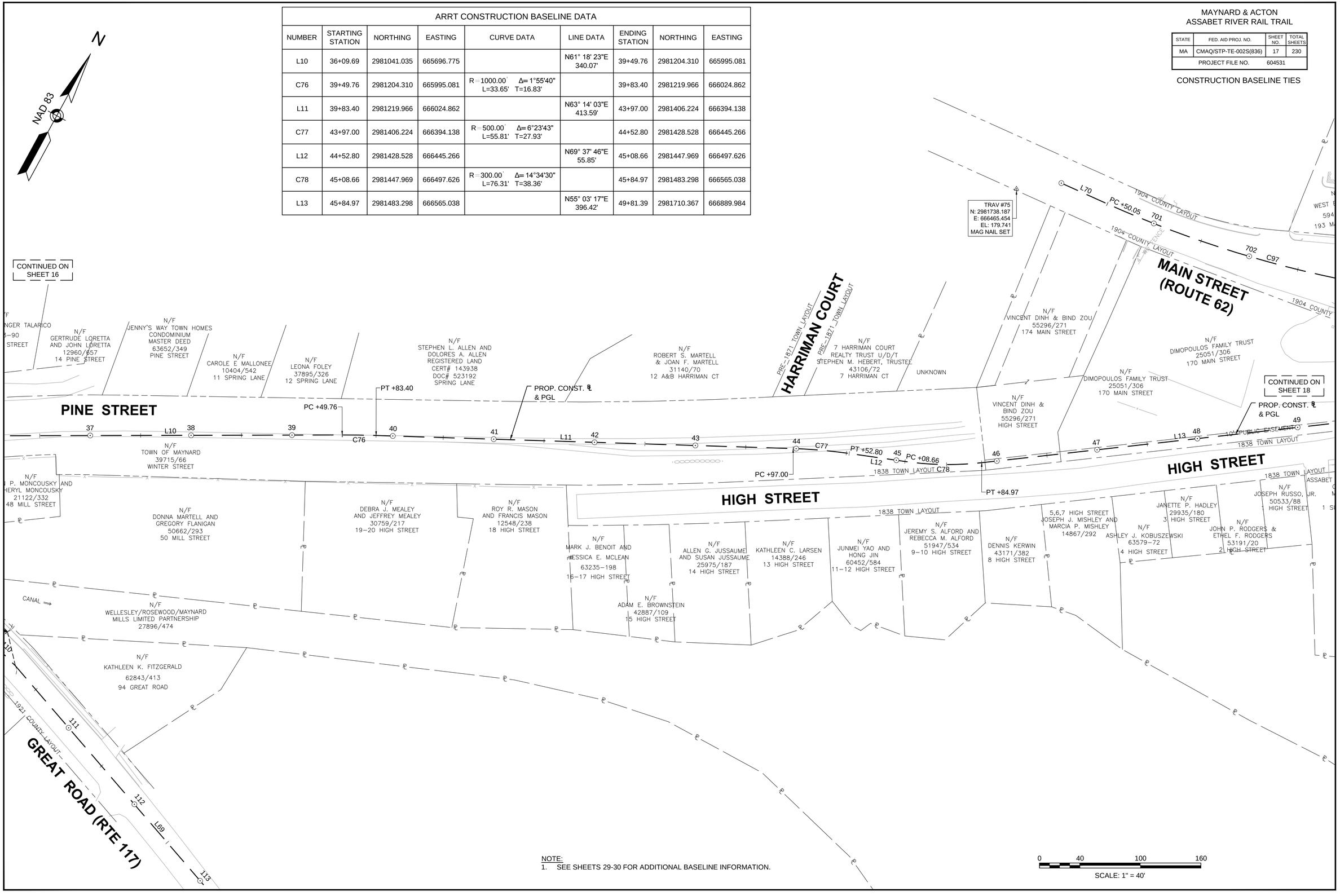

NOTE:
1. SEE SHEETS 29-30 FOR ADDITIONAL BASELINE INFORMATION.

604531_HD(SC).DWG Plotted on 8-Oct-2015 12:56 PM

MAYNARD & ACTON
ASSABET RIVER RAIL TRAIL

STATE	FED. AID PROJ. NO.	SHEET NO.	TOTAL SHEETS
MA	CMAQ/STP-TE-002S(836)	16	230
PROJECT FILE NO.	604531		

CONSTRUCTION BASELINE TIES

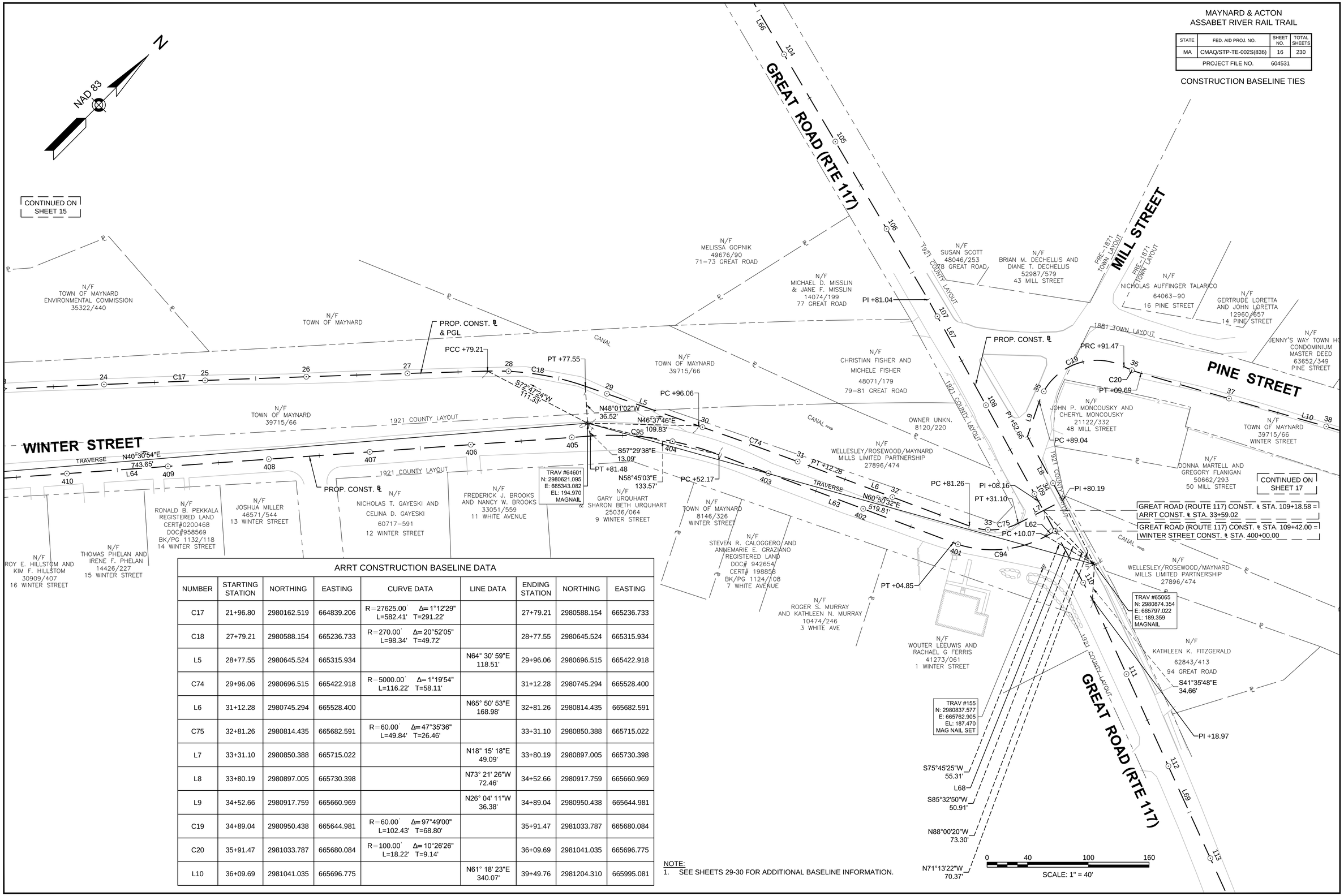

ARRT CONSTRUCTION BASELINE DATA

NUMBER	STARTING STATION	NORTHING	EASTING	CURVE DATA	LINE DATA	ENDING STATION	NORTHING	EASTING
C17	21+96.80	2980162.519	664839.206	R=27625.00' Δ=1°12'29" L=582.41' T=291.22'		27+79.21	2980588.154	665236.733
C18	27+79.21	2980588.154	665236.733	R=270.00' Δ=20°52'05" L=98.34' T=49.72'		28+77.55	2980645.524	665315.934
L5	28+77.55	2980645.524	665315.934		N64° 30' 59"E 118.51'	29+96.06	2980696.515	665422.918
C74	29+96.06	2980696.515	665422.918	R=5000.00' Δ=1°19'54" L=116.22' T=58.11'		31+12.28	2980745.294	665528.400
L6	31+12.28	2980745.294	665528.400		N65° 50' 53"E 168.98'	32+81.26	2980814.435	665682.591
C75	32+81.26	2980814.435	665682.591	R=60.00' Δ=47°35'36" L=49.84' T=26.46'		33+31.10	2980850.388	665715.022
L7	33+31.10	2980850.388	665715.022		N18° 15' 18"E 49.09'	33+80.19	2980897.005	665730.398
L8	33+80.19	2980897.005	665730.398		N73° 21' 26"W 72.46'	34+52.66	2980917.759	665660.969
L9	34+52.66	2980917.759	665660.969		N26° 04' 11"W 36.38'	34+89.04	2980950.438	665644.981
C19	34+89.04	2980950.438	665644.981	R=60.00' Δ=97°49'00" L=102.43' T=68.80'		35+91.47	2981033.787	665680.084
C20	35+91.47	2981033.787	665680.084	R=100.00' Δ=10°26'26" L=18.22' T=9.14'		36+09.69	2981041.035	665696.775
L10	36+09.69	2981041.035	665696.775		N61° 18' 23"E 340.07'	39+49.76	2981204.310	665995.081

NOTE:
1. SEE SHEETS 29-30 FOR ADDITIONAL BASELINE INFORMATION.

604531_HD(SC).DWG Plotted on 8-Oct-2015 12:56 PM

MAYNARD & ACTON
ASSABET RIVER RAIL TRAIL

STATE	FED. AID PROJ. NO.	SHEET NO.	TOTAL SHEETS
MA	CMAQ/STP-TE-002S(836)	15	230
PROJECT FILE NO.	604531		

CONSTRUCTION BASELINE TIES

NAD 83

N

ARRT CONSTRUCTION BASELINE DATA

NUMBER	STARTING STATION	NORTHING	EASTING	CURVE DATA	LINE DATA	ENDING STATION	NORTHING	EASTING
C7	12+66.76	2979623.070	664087.058	R=1000.00' Δ=3°47'31" L=66.18' T=33.10'		13+32.94	2979656.472	664144.178
L2	13+32.94	2979656.472	664144.178		N61° 34' 39"E 122.68'	14+55.63	2979714.865	664252.073
C8	14+55.63	2979714.865	664252.073	R=100.00' Δ=13°33'24" L=23.66' T=11.89'		14+79.29	2979728.472	664271.362
C9	14+79.29	2979728.472	664271.362	R=100.00' Δ=12°23'58" L=21.64' T=10.86'		15+00.93	2979741.100	664288.884
C10	15+00.93	2979741.100	664288.884	R=1000.00' Δ=4°03'15" L=70.76' T=35.39'		15+71.68	2979778.175	664349.133
C11	15+71.68	2979778.175	664349.133	R=5700.00' Δ=1°48'09" L=179.33' T=89.67'		17+51.01	2979879.835	664496.856
C12	17+51.01	2979879.835	664496.856	R=100.00' Δ=12°51'07" L=22.43' T=11.26'		17+73.45	2979890.690	664516.431

ARRT CONSTRUCTION BASELINE DATA

NUMBER	STARTING STATION	NORTHING	EASTING	CURVE DATA	LINE DATA	ENDING STATION	NORTHING	EASTING
C13	17+73.45	2979890.690	664516.431	R=100.00' Δ=13°56'27" L=24.33' T=12.23'		17+97.78	2979902.662	664537.545
L3	17+97.78	2979902.662	664537.545		N53° 28' 29"E 103.32'	19+01.09	2979964.155	664620.570
C14	19+01.09	2979964.155	664620.570	R=100.00' Δ=13°28'47" L=23.53' T=11.82'		19+24.62	2979980.242	664637.663
C15	19+24.62	2979980.242	664637.663	R=100.00' Δ=12°27'42" L=21.75' T=10.92'		19+46.37	2979995.259	664653.337
L4	19+46.37	2979995.259	664653.337		N52° 27' 24"E 28.40'	19+74.77	2980012.566	664675.857
C16	19+74.77	2980012.566	664675.857	R=1270.00' Δ=10°00'59" L=222.02' T=111.30'		21+96.80	2980162.519	664839.206
C17	21+96.80	2980162.519	664839.206	R=27625.00' Δ=1°12'29" L=582.41' T=291.22'		27+79.21	2980588.154	665236.733

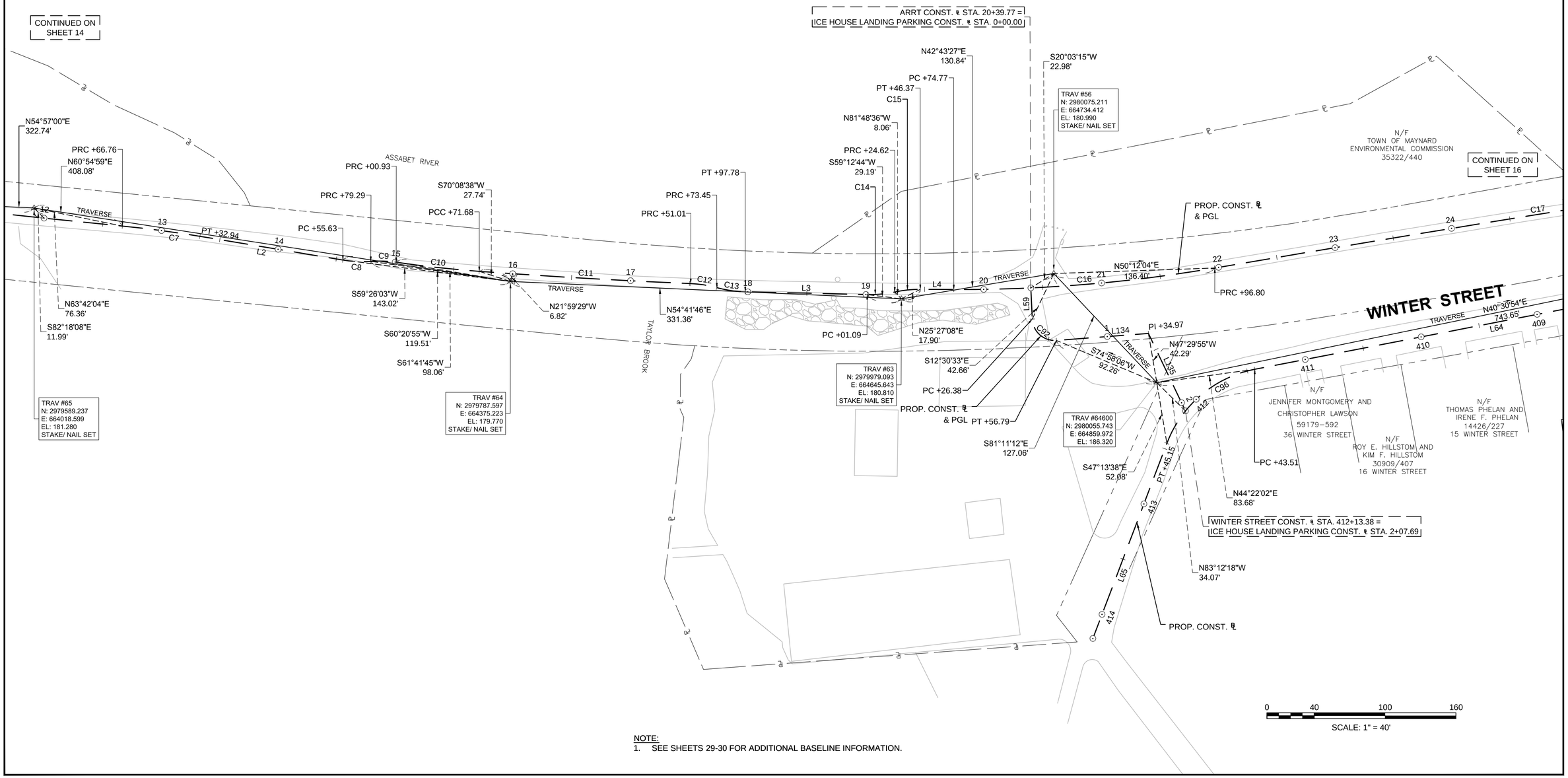

NOTE:
1. SEE SHEETS 29-30 FOR ADDITIONAL BASELINE INFORMATION.

604531_HD(SC).DWG Plotted on 8-Oct-2015 12:55 PM

MAYNARD & ACTON
ASSABET RIVER RAIL TRAIL

STATE	FED. AID PROJ. NO.	SHEET NO.	TOTAL SHEETS
MA	CMAQ/STP-TE-002S(836)	14	230
PROJECT FILE NO.	604531		

CONSTRUCTION BASELINE TIES

ARRT CONSTRUCTION BASELINE DATA

NUMBER	STARTING STATION	NORTHING	EASTING	CURVE DATA	LINE DATA	ENDING STATION	NORTHING	EASTING
C1	0+00.00	2978883.324	663064.588	R=200.00' Δ=19°58'49" L=69.74' T=35.23'		0+69.74	2978923.955	663120.840
L1	0+69.74	2978923.955	663120.840		N44° 10' 09"E 141.04'	2+10.79	2979025.125	663219.117
C2	2+10.79	2979025.125	663219.117	R=500.00' Δ=4°38'20" L=40.48' T=20.25'		2+51.27	2979052.988	663248.467
C3	2+51.27	2979052.988	663248.467	R=3150.00' Δ=9°29'13" L=521.57' T=261.38'		7+72.84	2979362.502	663667.536
C4	7+72.84	2979362.502	663667.536	R=2475.00' Δ=2°36'10" L=112.43' T=56.22'		8+85.27	2979423.741	663761.812
C5	8+85.27	2979423.741	663761.812	R=500.00' Δ=3°41'40" L=32.24' T=16.13'		9+17.51	2979441.042	663789.010
C6	9+17.51	2979441.042	663789.010	R=12500.00' Δ=1°36'03" L=349.25' T=174.64'		12+66.76	2979623.070	664087.058

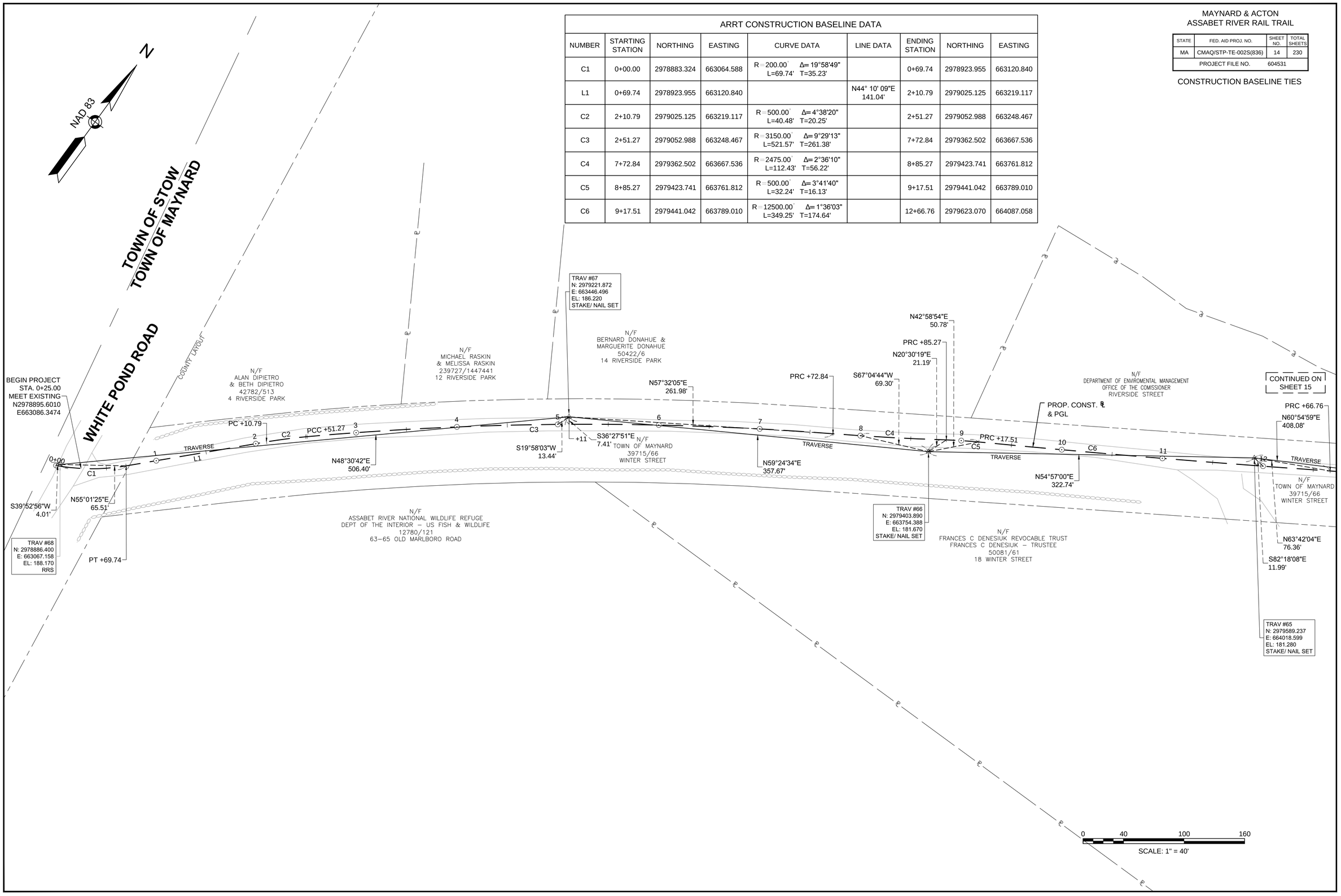

604531_HD(SC).DWG Plotted on 8-Oct-2015 12:55 PM

MAYNARD & ACTON
ASSABET RIVER RAIL TRAIL

STATE	FED. AID PROJ. NO.	SHEET NO.	TOTAL SHEETS
MA	CMAQ/STP-TE-002S(836)	13	230
PROJECT FILE NO.	604531		

TYPICAL SECTIONS

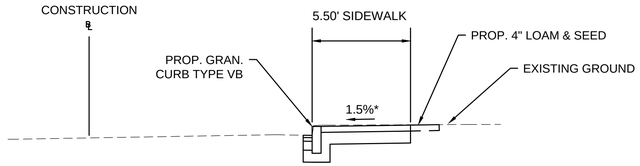

TYPICAL SECTION - 5.5' WIDE SIDEWALK
(MAPLE STREET)
SCALE 1" = 4'
STA. 204+08± - STA. 205±07

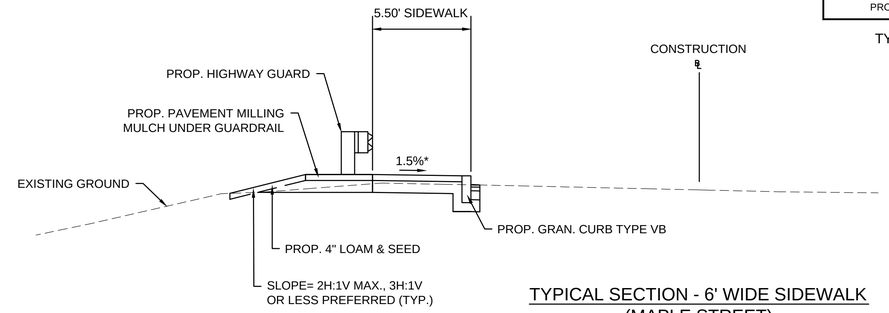

TYPICAL SECTION - 6' WIDE SIDEWALK
(MAPLE STREET)
SCALE 1" = 4'
STA. 206+85± - STA. 208+83±

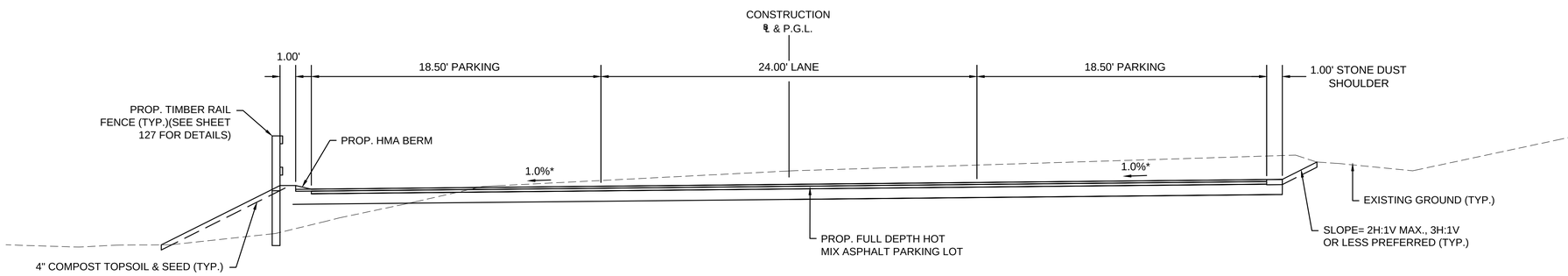

TYPICAL SECTION - PARKING LOT
(MAPLE STREET PARKING)
SCALE 1" = 4'
STA. 0+78± - STA. 2+04± (MAPLE PARKING)

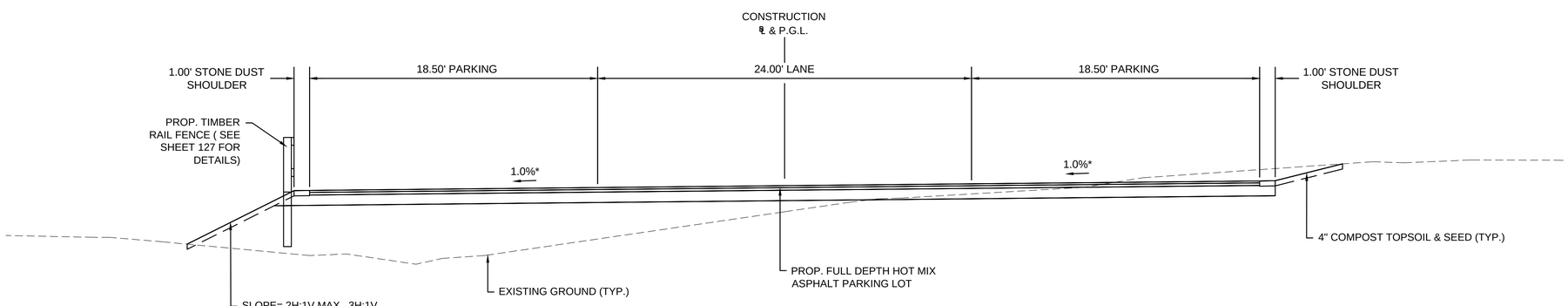

TYPICAL SECTION - PARKING LOT
(ICE HOUSE LANDING)
SCALE 1" = 4'
STA. 0+77± - STA.1+76± (ICEHOUSE LANDING)

HOR. SCALE IN FEET
4 0 4 8
4 0 4 8
VER. SCALE IN FEET

NOTE:
*TOLERANCE OF CONSTRUCTION SHALL BE ± 0.5%

604531_HD(TYP).DWG Plotted on 8-Oct-2015 12:55 PM

MAYNARD & ACTON
ASSABET RIVER RAIL TRAIL

STATE	FED. AID PROJ. NO.	SHEET NO.	TOTAL SHEETS
MA	CMAQ/STP-TE-002S(836)	12	230
PROJECT FILE NO.	604531		

TYPICAL SECTIONS

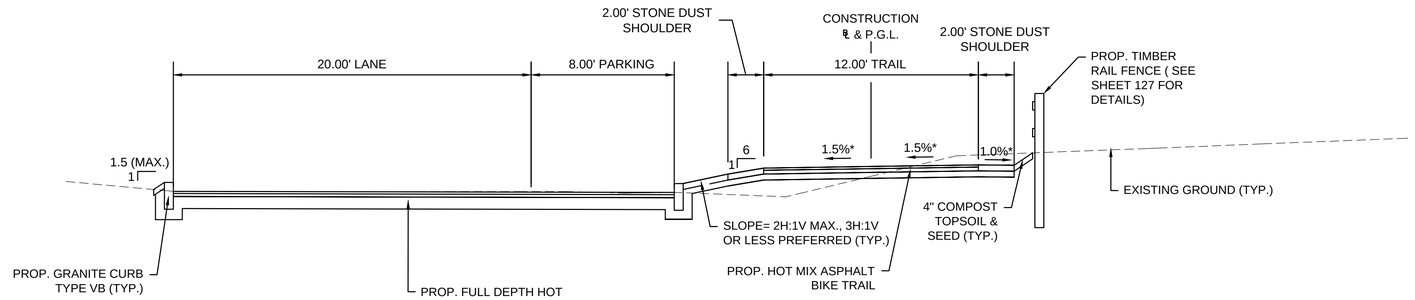

TYPICAL SECTION - 12' WIDE TRAIL
WITH ADJACENT PARKING LOT
SCALE 1" = 4'
STA 177+05± TO STA 179+40±

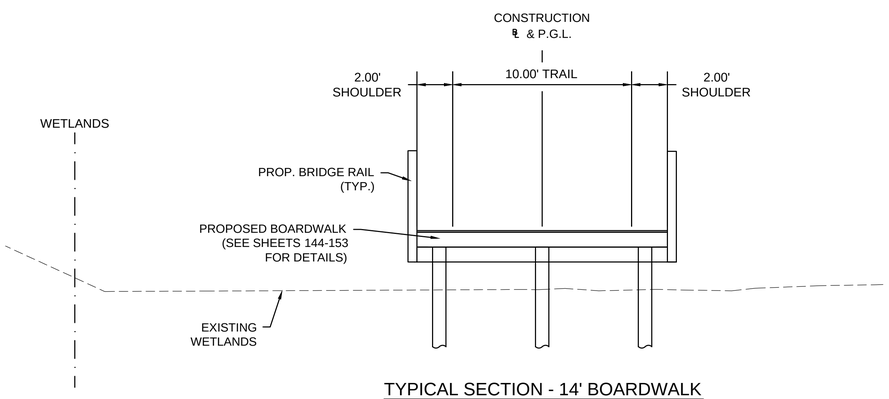

TYPICAL SECTION - 14' BOARDWALK
SCALE 1" = 4'
STA 137+18± TO STA 140+43±

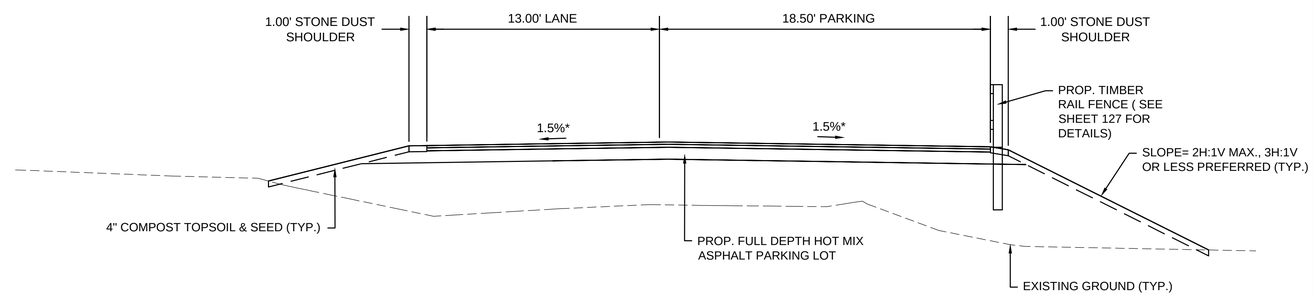

TYPICAL SECTION - PARKING LOT
(SYLVIA ST.)
SCALE 1" = 4'
STA. 502+12± - STA. 502+85± (SYLVIA ST.)

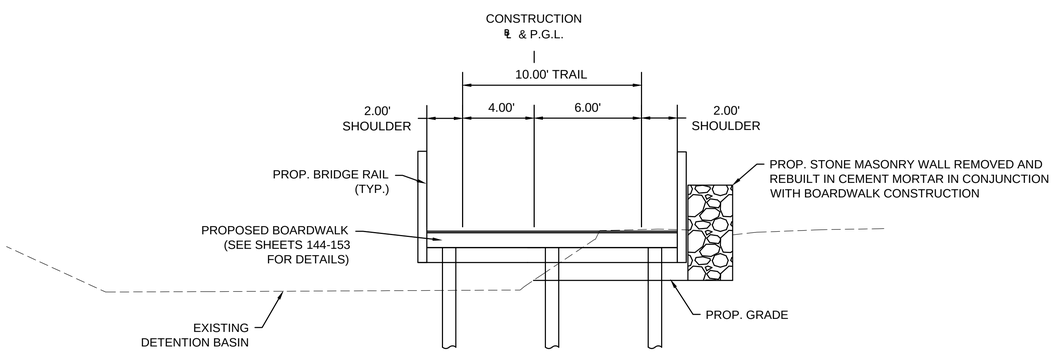

TYPICAL SECTION - 14' BOARDWALK
WITH STONE MASONRY WALL
SCALE 1" = 4'
STA 134+53± TO STA 137+18±

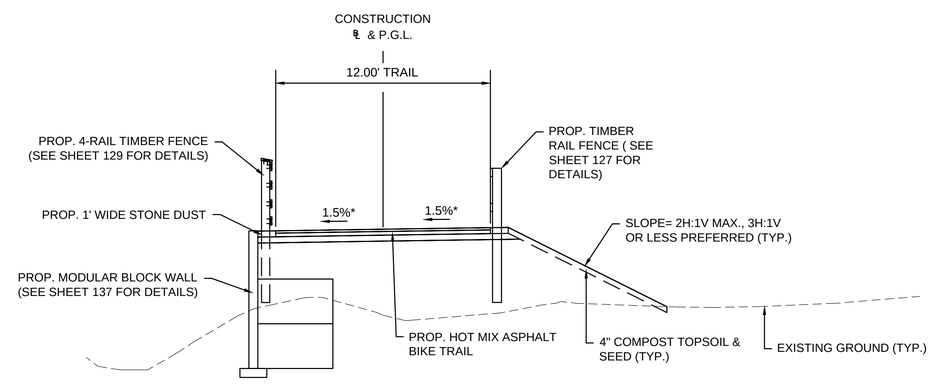

TYPICAL SECTION - 12' TRAIL
WITH MODULAR BLOCK WALL
(SYLVIA ST.)
SCALE 1" = 4'
STA. 501+00± - STA. 502+04± (SYLVIA ST.)

HOR. SCALE IN FEET
4 0 4 8
4 0 4 8
VER. SCALE IN FEET

NOTE:
*TOLERANCE OF CONSTRUCTION SHALL BE ± 0.5%

604531_HD(TYP).DWG Plotted on 8-Oct-2015 12:55 PM

MAYNARD & ACTON
ASSABET RIVER RAIL TRAIL

STATE	FED. AID PROJ. NO.	SHEET NO.	TOTAL SHEETS
MA	CMAQ/STP-TE-002S(836)	11	230
PROJECT FILE NO.	604531		

TYPICAL SECTIONS

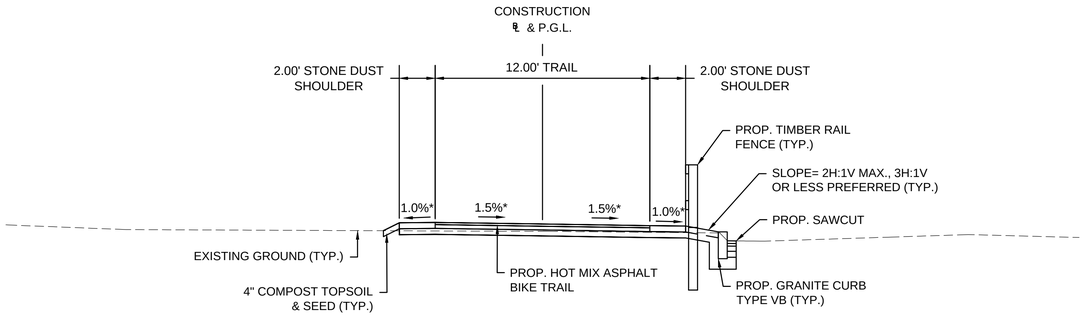

TYPICAL SECTION - 12' WIDE TRAIL
(HAYNES ST.)
SCALE 1" = 4'
STA 86+34± TO STA 88+38±

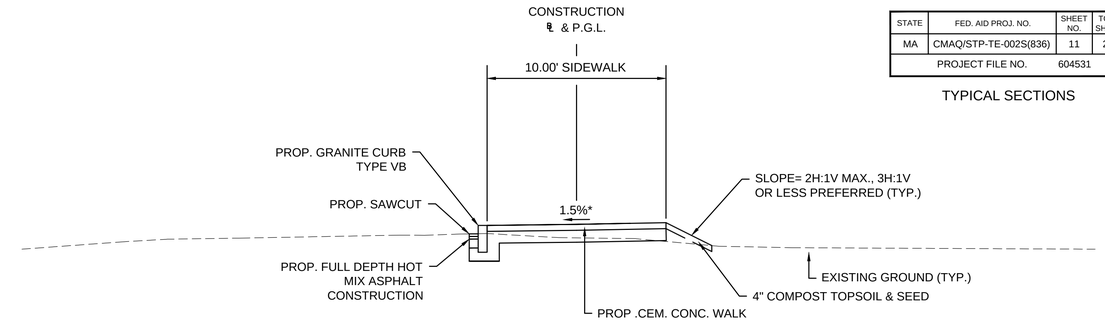

TYPICAL SECTION - 10' CEM .CONC. WALK
(MAPLE ST.)
SCALE 1" = 4'
STA179+75± TO STA 180+33±

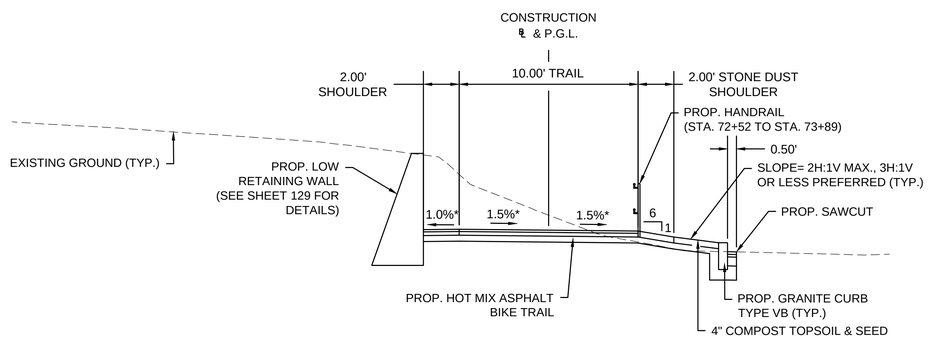

TYPICAL SECTION - 10' WIDE TRAIL
WITH LOW RETAINING WALL
SCALE 1" = 4'
STA 73+26± TO STA 74+15±

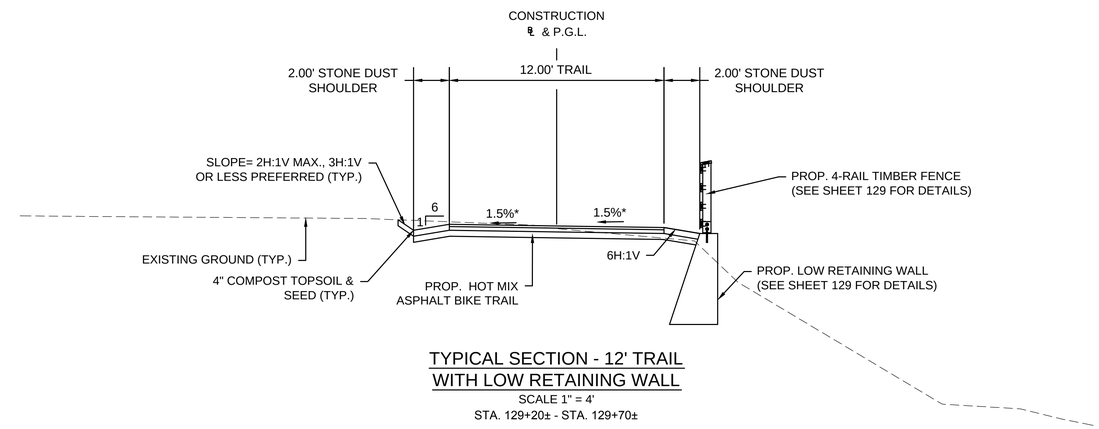

TYPICAL SECTION - 12' TRAIL
WITH LOW RETAINING WALL
SCALE 1" = 4'
STA. 129+20± - STA. 129+70±

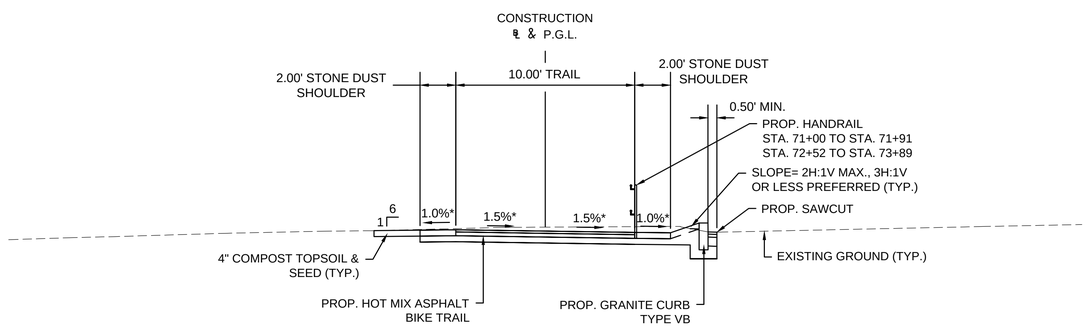

TYPICAL SECTION - 10' WIDE TRAIL
(FLORIDA RD. & MUNICIPAL PARKING LOT)
SCALE 1" = 4'
STA 63+53± TO STA 64+90±
STA 69+70± TO STA 73+26±

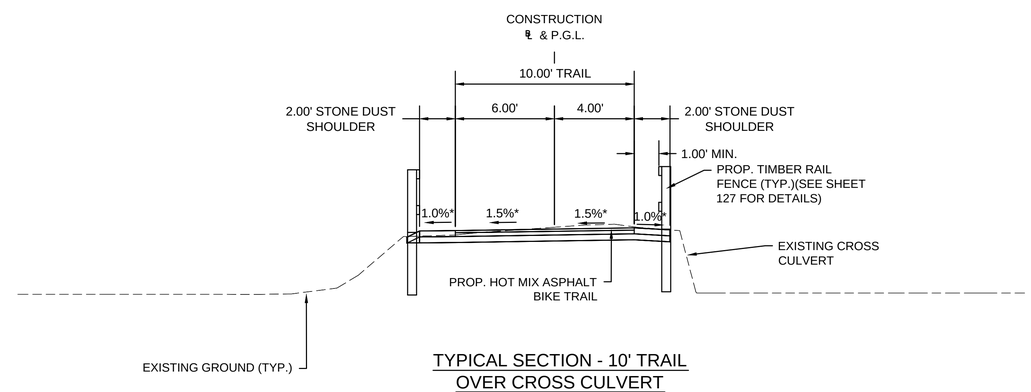

TYPICAL SECTION - 10' TRAIL
OVER CROSS CULVERT
SCALE 1" = 4'
STA. 126+12± - STA. 126+54±

HOR. SCALE IN FEET
4 0 4 8
4 0 4 8
VER. SCALE IN FEET

NOTE:
*TOLERANCE OF CONSTRUCTION SHALL BE ± 0.5%

604531_HD(TYP).DWG Plotted on 8-Oct-2015 12:54 PM

MAYNARD & ACTON
ASSABET RIVER RAIL TRAIL

STATE	FED. AID PROJ. NO.	SHEET NO.	TOTAL SHEETS
MA	CMAQ/STP-TE-002S(836)	10	230
PROJECT FILE NO.	604531		

TYPICAL SECTIONS

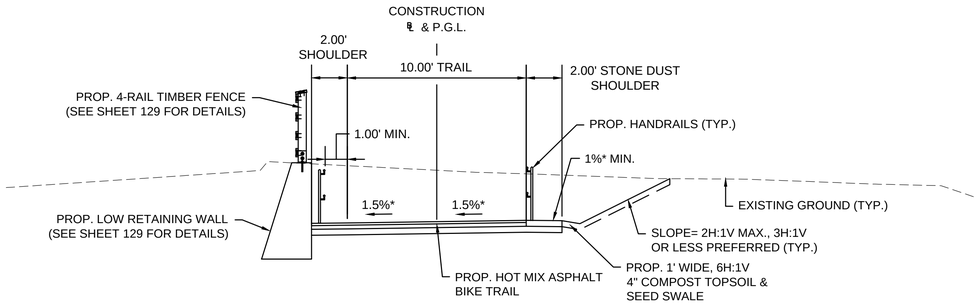

TYPICAL SECTION - 10' WIDE TRAIL
WITH LOW RETAINING WALL
AND HANDRAILS
(RAILROAD STREET)
SCALE 1" = 4'
STA 61+80± - STA. 62+11±
STA. 62+54± - STA. 62+86±

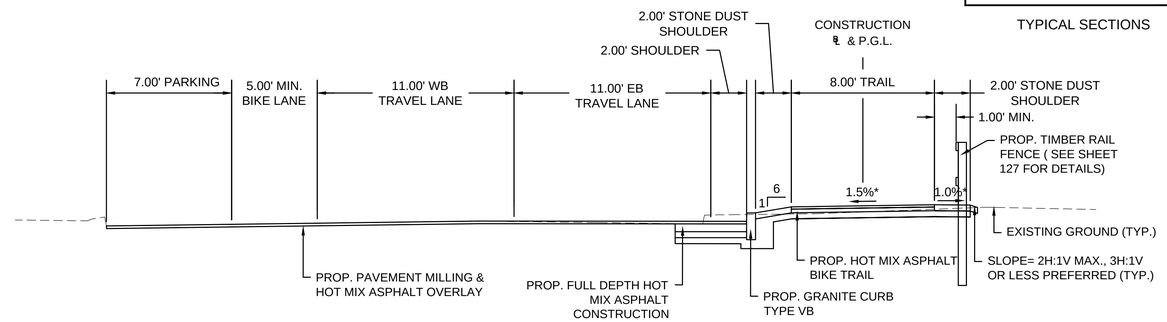

TYPICAL SECTION - 8' WIDE TRAIL
ADJACENT TO MAIN ST. WITH PARKING ON
ONE SIDE
SCALE 1" = 4'
STA. 54+54± - STA. 56+37±

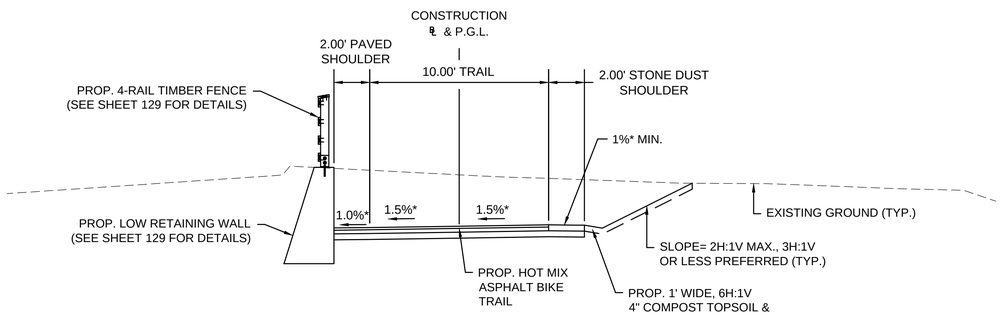

TYPICAL SECTION - 10' WIDE TRAIL
WITH LOW RETAINING WALL
(RAILROAD STREET)
SCALE 1" = 4'
STA 60+90± - STA. 61+80±
STA. 62+11± - STA. 62+54±
STA. 62+86± - STA. 62+97±

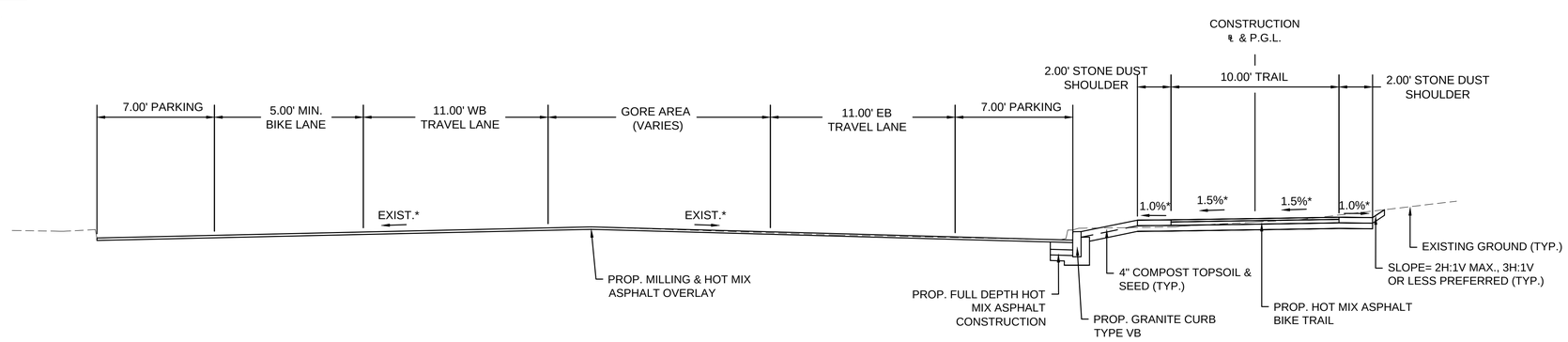

TYPICAL SECTION - 10' WIDE TRAIL
ADJACENT TO MAIN ST. WITH PARKING ON
BOTH SIDES
SCALE 1" = 4'
STA. 51+50± - STA. 53+33±

HOR. SCALE IN FEET
4 0 4 8
4 0 4 8
VER. SCALE IN FEET

NOTE:
*TOLERANCE OF CONSTRUCTION SHALL BE ± 0.5%

604531_HD(TYP).DWG Plotted on 8-Oct-2015 12:54 PM

MAYNARD & ACTON
ASSABET RIVER RAIL TRAIL

STATE	FED. AID PROJ. NO.	SHEET NO.	TOTAL SHEETS
MA	CMAQ/STP-TE-002S(836)	9	230
PROJECT FILE NO.	604531		

TYPICAL SECTIONS

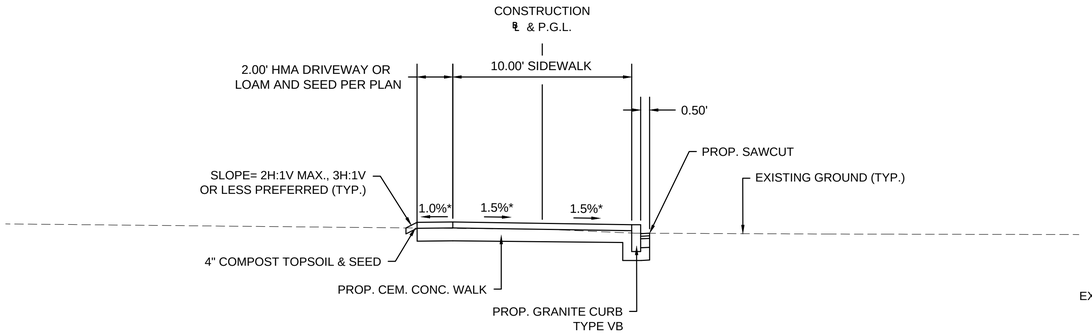

TYPICAL SECTION - 10' CEM. CONC. WALK (SUDBURY ST.)
SCALE 1" = 4'
STA 49+69± TO STA 50+73±

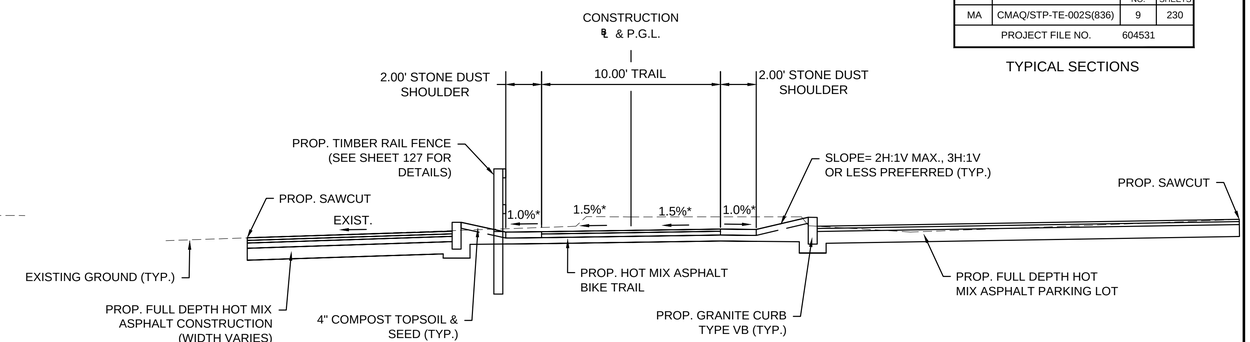

TYPICAL SECTION - 10' WIDE TRAIL
(RAILROAD ST. & MAIN ST.)
SCALE 1" = 4'
STA 62+15± TO STA 62+95±

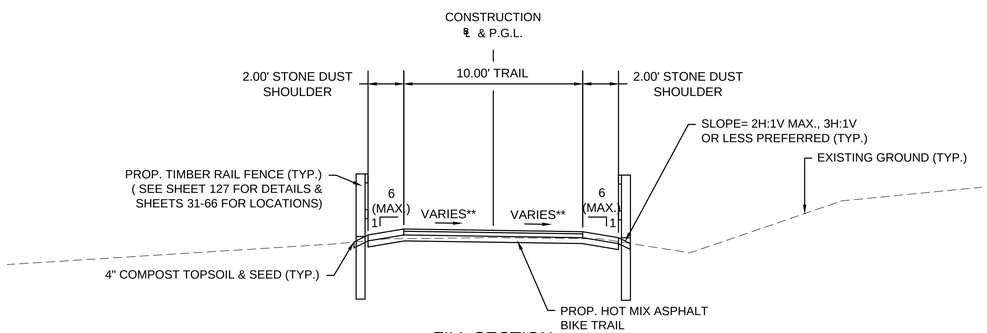

FILL SECTION

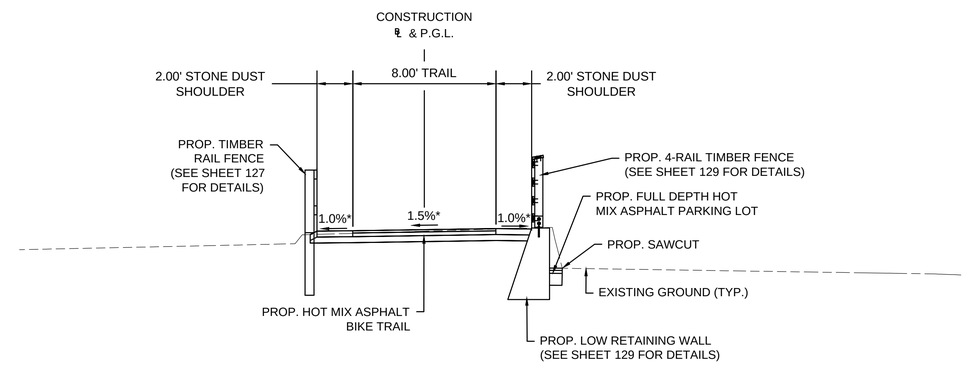

TYPICAL SECTION - 8' WIDE TRAIL WITH
LOW RETAINING WALL
(RAILROAD ST & MAIN ST)
SCALE 1" = 4'
STA 58+10± TO STA 59+31±

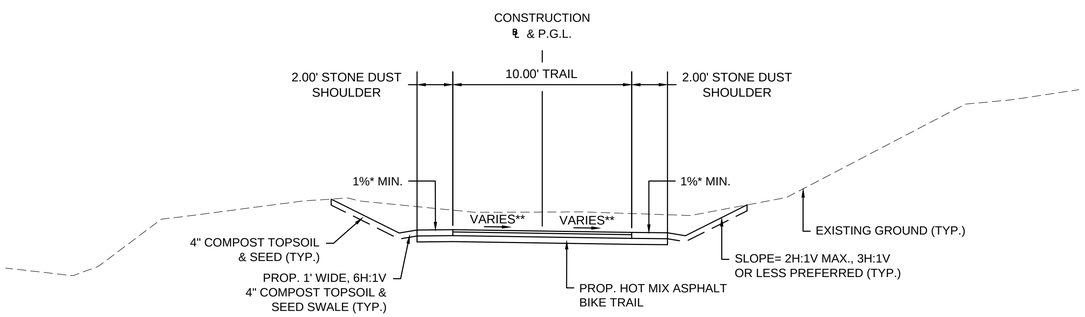

CUT SECTION

TYPICAL SECTION - 10' WIDE TRAIL
SCALE 1" = 4'
STA. 28+81± - STA. 29+78±
STA. 33+20± - STA. 33+39±
STA. 45+85± - STA. 49+56±
STA. 59+58± - STA. 60+50±
STA. 62+95± - STA. 63+15±
STA. 64+90± - STA. 69+70±
STA. 75+65± - STA. 77+38±
STA. 100+46± - STA. 112+76±
STA. 131+73± - STA. 134+39±

TYPICAL SECTION - 8' WIDE TRAIL
(RAILROAD ST. & MAIN ST.)
SCALE 1" = 4'
STA 56+93± TO STA 57+40±

HOR. SCALE IN FEET
4 0 4 8
4 0 4 8
VER. SCALE IN FEET

*TOLERANCE OF CONSTRUCTION SHALL BE ± 0.5%
**CROSS SLOPES OF THE TRAIL VARIES, SEE SHEET 8 FOR SUPERELEVATION TABLE.

604531_HD(TYP).DWG Plotted on 8-Oct-2015 12:54 PM

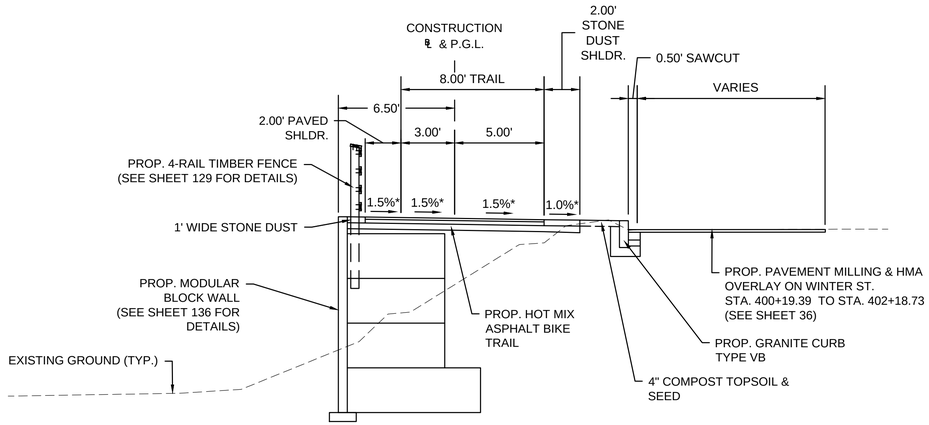

TYPICAL SECTION - 8' TRAIL
WITH MODULAR BLOCK WALL
(WINTER ST.)

SCALE 1" = 4'
STA. 29+78± - STA. 33+20±

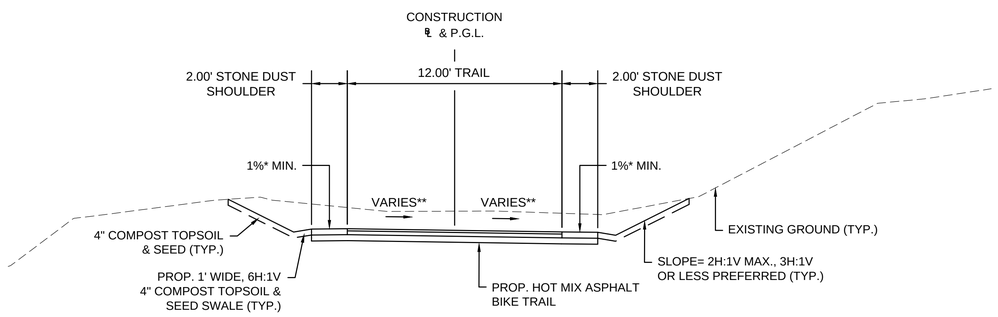

CUT SECTION

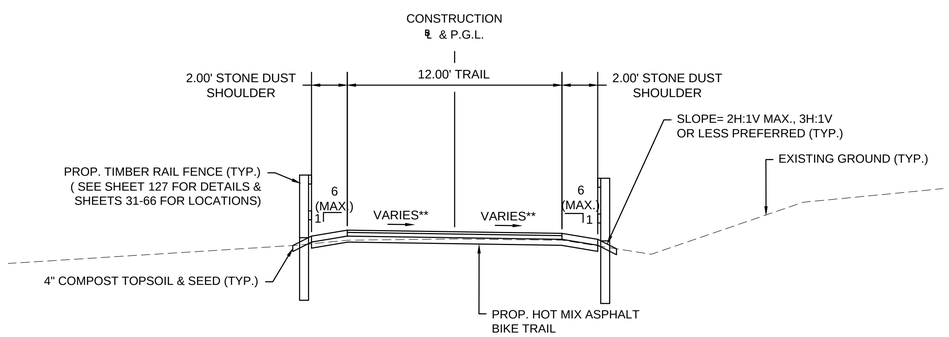

FILL SECTION

TYPICAL SECTION - 12' WIDE TRAIL

SCALE 1" = 4'
STA. 0+38± - STA. 27+79±
STA. 34+85± - STA. 45+05±
STA. 77+92± - STA. 86+10±
STA. 88+85± - STA. 100+36±
STA. 112+86± - STA. 126+02±
STA. 126+64± - STA. 129+20±
STA. 129+70± - STA. 131+35±
STA. 140+62± - STA. 177+03±
STA. 500+06± - STA. 501+00± (SYLVIA ST)
STA. 0+06± - STA. 0+62± (ICEHOUSE LANDING)

HOR. SCALE IN FEET
4 0 4 8
4 0 4 8
VER. SCALE IN FEET

*TOLERANCE OF CONSTRUCTION SHALL BE ± 0.5%
**CROSS SLOPES OF THE TRAIL VARIES, SEE THIS SHEET FOR SUPERELEVATION TABLE.

PAVEMENT NOTES

HOT MIX ASPHALT BIKE TRAIL

SURFACE COURSE: 1 1/2" SUPERPAVE SURFACE COURSE - 9.5 (SSC-9.5) OVER
INTERMEDIATE COURSE: 2 1/2" SUPERPAVE INTERMEDIATE COURSE - 19.0 (SIC-19.0) OVER
FOUNDATION: 2" - 8" GRAVEL BORROW (M1.03.0 TYPE B) (SEE NOTE 2) OVER SPECIAL BORROW AS REQUIRED

FULL DEPTH HOT MIX ASPHALT CONSTRUCTION
(AT ROADWAY CROSSINGS AS SHOWN ON PLANS)

SURFACE COURSE: 1-1/2" SUPERPAVE SURFACE COURSE - 9.5 (SSC-9.5) OVER
2-1/2" SUPERPAVE INTERMEDIATE COURSE - 19.0 (SIC-19.0) OVER

BASE COURSE: 3-1/2" SUPERPAVE BASE COURSE - 37.5 (SBC-37.5) OVER

SUBBASE: 4" DENSE GRADED CRUSHED STONE OVER
8" GRAVEL BORROW (M1.03.0 TYPE B) (OR TO DEPTH OF EXISTING GRAVEL SUBBASE, WHICHEVER IS GREATER)

FULL DEPTH WIDENING LESS THAN 4 FEET

SURFACE: 1-1/2" SUPERPAVE SURFACE COURSE - 9.5 (SSC-9.5) OVER
2-1/2" SUPERPAVE INTERMEDIATE COURSE - 19.0 (SIC-19.0) OVER

BASE: 6" HIGH-EARLY-STRENGTH CEMENT CONCRETE BASE COURSE OVER

SUBBASE: 8" GRAVEL BORROW (M1.03.0 TYPE B)

MILLING & HOT MIX ASPHALT OVERLAY

SURFACE COURSE: 1-1/2" SUPERPAVE SURFACE COURSE - 9.5 (SSC-9.5) OVER

SURFACE MILLING: 1-1/2" PAVEMENT MILLING TO MATCH EXISTING CROSS SLOPE

TACK COAT: ASPHALT EMULSION FOR TACK COAT SHALL BE APPLIED AT THE RATE OF 0.07 GAL/S.Y. FOR MILLED SURFACES AND 0.05 GAL/S.Y. FOR SMOOTH TIGHT PAVED SURFACES

STONE DUST SHOULDER

SURFACE: 4" STONE DUST OVER

FOUNDATION: 2" - 8" GRAVEL BORROW (M1.03.0 TYPE B) (SEE NOTE 2)

CEMENT CONCRETE SIDEWALKS, DRIVEWAYS, REST AREAS & WHEELCHAIR RAMPS:

SURFACE COURSE: 4" CEMENT CONCRETE (6" AT DRIVEWAYS)
(AIR ENTRAINED 4000 PSI, 3/4", 610) OVER

SUBBASE: 8" GRAVEL BORROW (M1.03.0 TYPE B)

CEMENT CONCRETE SPLITTER ISLANDS:

SURFACE COURSE: 4" STAMPED CEMENT CONCRETE (AIR ENTRAINED 4000 PSI, 3/4", 610) OVER

SUBBASE: 8" GRAVEL BORROW (M1.03.0 TYPE B)

HOT MIX ASPHALT WALKS

SURFACE: 2 1/2" SUPERPAVE SURFACE COURSE - 9.5 (SSC-9.5) OVER

SUBBASE: 8" GRAVEL BORROW (M1.03.0 TYPE B OR EXISTING GRAVEL BORROW TO REMAIN)

HOT MIX ASPHALT PARKING LOTS & DRIVEWAYS

SURFACE COURSE: 1 1/2" SUPERPAVE SURFACE COURSE -9.5 (SSC-9.5) OVER

INTERMEDIATE COURSE: 2" SUPERPAVE INTERMEDIATE COURSE -19.0 (SIC-19.0) OVER

FOUNDATION: 8" GRAVEL BORROW (M1.03.0 TYPE B OR EXISTING GRAVEL BORROW TO REMAIN)

BRICK WALK

SURFACE: KILN FIRED BRICKS SET ON A BED OF MORTAR OVER

BASE: 4" CEMENT CONCRETE BASE OVER

SUBBASE: 8" GRAVEL BORROW (M1.03.0 TYPE B)

NOTE:
1. THE SECTIONS OF PROPOSED TRAIL NOT COVERED IN THE RANGE OF STATIONS ASSOCIATED WITH THE TYPICAL SECTIONS ARE EITHER AT INTERSECTIONS OR ARE IN AREAS OF TRANSITION AND THEREFORE HAVE NOT BEEN SHOWN. REFER TO SHEETS 161-230 FOR MORE DETAILS.
2. SUBBASE SHALL BE A MINIMUM OF 2" GRAVEL BORROW FOR LEVELING OVER RAILROAD BALLAST. SUBBASE SHALL BE 8" GRAVEL BORROW OVER MINIMUM 24" SPECIAL BORROW AT FILL SECTIONS IN AREAS OF WETLANDS AND OTHER UNSUITABLE MATERIAL IN ACCORDANCE WITH SECTIONS 150 AND 170 OF THE STANDARD SPECIFICATIONS FOR HIGHWAYS AND BRIDGES.

0+70 TO 10+70; 20+15 TO 33+39; 47+85 TO 50+78;
63+41 TO 64+90; 67+05 TO 74+21; 75+35 TO 77+20;
86+31 TO 88+56; 126+64 TO 131+35; 140+53 TO 169+22

0+65; 10+75; 20+10; 47+80; 64+95;
67+00; 77+25; 126+59; 134+53 TO 104+43

0+00 TO 0+60; 10+80 TO 20+05; 33+75 TO 47+75;
51+35 TO 63+15; 65+00 TO 66+95; 74+58 TO 74+97;
77+30 TO 86+08; 88+88 TO 126+54; 131+73 TO 134+43;
170+18 TO 180+00

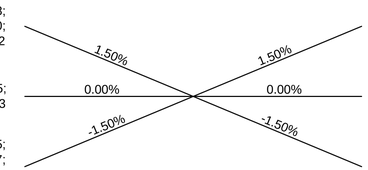

0+00 TO 0+60; 10+80 TO 20+05; 33+75 TO 47+75;
51+35 TO 63+15; 65+00 TO 66+95; 74+58 TO 74+97;
77+30 TO 86+08; 88+88 TO 126+54; 131+73 TO 134+43;
170+18 TO 180+00

0+65; 10+75; 20+10; 47+80; 64+95;
67+00; 77+25; 126+59; 134+53 TO 104+43

0+70 TO 10+70; 20+15 TO 33+39; 47+85 TO 50+78;
63+41 TO 64+90; 67+05 TO 74+21; 75+35 TO 77+20;
86+31 TO 88+56; 126+64 TO 131+35; 140+53 TO 169+22

BIKE TRAIL SLOPING

MAYNARD & ACTON
ASSABET RIVER RAIL TRAIL

STATE	FED. AID PROJ. NO.	SHEET NO.	TOTAL SHEETS
MA	CMAQ/STP-TE-002S(836)	8	230
PROJECT FILE NO.	604531		

TYPICAL SECTIONS

604531_HD(TYP).DWG Plotted on 8-Oct-2015 12:54 PM

MAYNARD & ACTON
ASSABET RIVER RAIL TRAIL

STATE	FED. AID PROJ. NO.	SHEET NO.	TOTAL SHEETS
MA	CMAQ/STP-TE-002S(836)	7	230
PROJECT FILE NO.	604531		

BORING LOGS

massDOT Highway

NOBIS ENGINEERING, INC.
585 Middlesex Street
Lowell, MA 01851

Phone: (978) 683-0891
Fax: (978) 683-0966
www.nobisengineering.com

Boring No. BB-3
Not to scale

City/Town: Acton | Bridge: A-02-042 (BP6) | Project File No: 604531 | Contract No: 68386
Project: Assabet River Rail Trail | Date Started: March 16, 2015 | Total Hours:
Groundwater Depth: 5'7" | Date & Time: 3/16/2015 1:25 pm | Date Completed: March 16, 2015 | 5.5
Coordinates: N 2991695.19 E 668094.26 | Driller's Name: Ben Cross | Helper's Name: Brett Raiche
Ground Elevation: ± 196 | Inspector's Name: Patrick Clarke | Driller's Company: New Hampshire Boring, Inc.

Sample Number	Depth Range (Feet)	Blow Counts per 6 Inches	Coring Times Minute Per Foot	Recovery Inches	Field Description	Strata Changes
S-1	0' - 2'	2 5 4 3		7"	S-1A (5"): Wet, loose, brown, FINE TO COARSE GRAVEL and fine to coarse sand, some organic silt, trace roots (TOPSOIL). S-1B (2"): Wet, loose, light brown, FINE TO COARSE SAND, some inorganic silt, some fine to medium gravel, trace roots (FILL).	0.4'
S-2	3'6" - 5'6"	32 18 11 9		2"	S-2: Wet, medium dense, light brown, FINE TO COARSE SAND and fine to coarse gravel, some inorganic silt (FILL).	
S-3	5'6" - 7'6"	4 2 2 2		6"	S-3A (4"): Wet, very loose, light brown, FINE TO COARSE SAND and inorganic silt, some medium to coarse gravel (FILL). S-3B (2"): Wet, very loose, dark gray, FINE TO COARSE SAND and inorganic silt, trace roots (FILL).	
S-4	7'6" - 9'6"	4 WOH WOH WOH		11"	S-4: Wet, very loose, olive/gray/light brown, FINE TO COARSE SAND and inorganic silt, trace roots (FILL).	9.5'
S-5	9'6" - 11'6"	11 11 5 4		9"	S-5: Wet, medium dense, brown, INORGANIC SILT and fine sand (SILT). [Laboratory Analysis Performed: Sample determined to be non-plastic. Moisture Content = 38%.]	
S-6	11'6" - 13'6"	7 23 25 24		24"	S-6A (14"): Wet, dense, brown, INORGANIC SILT and fine sand. 2" of ORGANIC SILT observed at transition (SILT).	
S-7	13'6" - 15'6"	15 15 20 20		7"	S-6B (10"): Wet, dense, gray, FINE TO COARSE SAND, some inorganic silt, some fine to coarse gravel, trace roots (GLACIAL TILL). S-7: Wet, dense, gray, FINE TO COARSE SAND, some inorganic silt, some fine to coarse gravel, trace roots (GLACIAL TILL). [Laboratory Analysis Performed: Sand: 45.1%, Silt: 27.8%, Gravel: 27.1%.]	12.7'
					Increased drilling resistance and cuttings observed indicate probable transition into weathered bedrock.	17'
S-8	18'6" - 18'7"	100/1"		1"	S-8: Wet, very dense, gray, FINE TO COARSE SAND, some fine to medium gravel, trace inorganic silt (WEATHERED BEDROCK).	19'
C-1	19' - 24'3"	9 3 4.3 4.8 8 2/3"		51"	C-1: Moderately hard, moderately weathered, extremely to slightly fractured, gray with dark gray bedding, very fine to medium grained GNEISS, very close to close, shallow to steeply dipping open and closed joints. Percent Recovery =81%, RQD = 38%	
C-2	24'3" - 29'3"	0.8 3.3 7 7.5 9.3		50.5"	C-2: Hard, slightly to very slightly weathered, extremely fractured to sound, gray with dark gray bedding, very fine to medium grained GNEISS, very close to moderately close, shallow to steeply dipping closed joints. Percent Recovery = 84%, RQD = 68%	
					Bottom of Exploration = 29'3"	29.3'

Notes:
1.Ground surface elevation should be considered approximate.
2. Boring drilled approximately 14'-7" south of existing railroad bridge south abutment.
3. Surface water in Mill Pond frozen and measured at approximately 6' below existing railroad bridge deck.
4. Water induced during drilling and coring processes.
5. Borehole backfilled with drill cuttings.

Protective Device - Stand: Box:
Well Depth: Solid Pipe:
Stick Up Pipe: Screen Pipe:
Type of Drill Rig: Mobile B-53 (Track)
Casing Type: HW Size: 4" Depth: 18'6"
Hammer Weight: 300Lbs. Fall: 30"
Signs: Cones: Arrow-Board:
Sampler Type: SS Size: 1 3/8"
Automatic Hammer Weight:
Safety Hammer Weight: 140Lbs.
Donut Hammer Weight:
Fall: 30"
Core Barrel Type: NX Size: 2.15"

Penetration Resistance (N) Guide:

Cohesionless Soils (Sands, Gravels)		Cohesive Soils (Silts, Clays)	
Relative Density	Penetration Resistance	Consistency	Penetration Resistance
Very Loose	0 - 4	Very Soft	0 - 2
Loose	4 - 10	Soft	2 - 4
Medium Dense	10 - 30	Medium Stiff	4 - 8
Dense	30 - 50	Stiff	8 - 15
Very Dense	Over 50	Very Stiff	15 - 30
N=Sum of Second and Third 6" Blow Counts		Hard	Over 30

Terms Used for Second Entry of Descriptions: and = 40-50%, some = 10-40%, trace = 10% or less

massDOT Highway

NOBIS ENGINEERING, INC.
585 Middlesex Street
Lowell, MA 01851

Phone: (978) 683-0891
Fax: (978) 683-0966
www.nobisengineering.com

Boring No. BB-4
Not to scale

City/Town: Acton | Bridge: A-02-042 (BP6) | Project File No: 604531 | Contract No: 68386
Project: Assabet River Rail Trail | Date Started: March 17, 2015 | Total Hours:
Groundwater Depth: 6'0" | Date & Time: 3/17/2015 1:58 pm | Date Completed: March 17, 2015 | 5.5
Coordinates: N 2991783.81 E 668111.12 | Driller's Name: Pete LaBossiere | Helper's Name: Brett Raiche
Ground Elevation: ± 195.5 | Inspector's Name: Craig Marchionda | Driller's Company: New Hampshire Boring, Inc.

Sample Number	Depth Range (Feet)	Blow Counts per 6 Inches	Coring Times Minute Per Foot	Recovery Inches	Field Description	Strata Changes
S-1	0' - 2'	7 7 9 10		9"	S-1A (2"): Wet, medium dense, black, FINE TO COARSE SAND, some organic silt, trace fine to medium gravel (TOPSOIL). S-1B (7"): Moist, medium dense, brown, FINE TO COARSE SAND, some fine to medium gravel, some inorganic silt, trace root fibers (FILL).	0.2'
S-2	2' - 4'	14 13 12 16		17"	S-2: Moist, medium dense, brown, FINE TO COARSE SAND, some inorganic silt, trace fine to medium gravel (FILL).	
S-3	4' - 6'	14 16 15 30		7"	S-3A (2"): Moist, dense, brown, FINE TO COARSE SAND, some inorganic silt, some medium gravel (FILL). S-3B (5"): Moist, dense, brown/gray with some orange mottling, MEDIUM TO COARSE GRAVEL, some inorganic silt, trace fine sand (FILL).	
S-4	6' - 8'	33 36 77 112		11"	S-4: Wet, very dense, gray/brown with some orange mottling, FINE TO MEDIUM GRAVEL, some inorganic silt, some fine to coarse sand.	9'
S-5	9' - 11'	13 3 3 11		16"	Probable cobble or boulder particles and fragments at bottom of spoon (FILL).	9.5'
S-6	11' - 13'	10 12 13 14		6"	Roller bit through inferred cobbles/boulder and advance casing to depth of approximately 9' below ground surface. S-5A (6"): Wet, loose, black, INORGANIC SILT, trace medium gravel, trace fine sand, trace organic silt (SILT).	11'
S-7	14' - 16'	7 23 23 17		8"	S-5B (10"): Wet, loose, brown, FINE TO COARSE SAND and inorganic silt, trace fine gravel (SAND AND SILT). [Laboratory Analysis Performed: Sand: 57.9%, Silt: 41.1%, Gravel: 1%.] S-6: Wet, medium dense, gray, FINE TO COARSE SAND, some fine to medium gravel, trace inorganic silt (GLACIAL TILL). S-7: Wet, dense, gray, FINE TO COARSE SAND, some inorganic silt, some fine to medium gravel (GLACIAL TILL). [Laboratory Analysis Performed: Sand: 48.2%, Silt: 34.4%, Gravel: 17.4%.]	
S-8	19' - 21'	54 18 17 11		0"	S-8: No recovery.	22.5'
C-1	23' - 28'	2.5 2.8 2.3 2.8 2.8		60"	Increased drilling resistance observed indicating probable transition into weathered bedrock. C-1: Moderately hard to hard, moderately to very severely weathered, extremely fractured to sound, gray and black, GNEISS, close to moderately close, moderately dipping joints. Percent Recovery = 100%, RQD = 38%	23'
C-2	28' - 33'	2.5 5.8 6 4.3 3		53"	C-2: Moderately hard to hard, very slightly to very severely weathered, extremely fractured to sound, gray and black, GNEISS, close to moderately close, shallow dipping joints. Percent Recovery = 88%, RQD = 30%	
					Bottom of Exploration = 33'	33'

Notes:
1. Ground surface elevation should be considered approximate.
2. Boring drilled approximately 9'-6" north of existing railroad bridge north abutment.
3. Surface water in Mill Pond measured at approximately 6' below adjacent existing grade.
4. Water induced during drilling and coring processes.
5. Borehole backfilled with drill cuttings.

Protective Device - Stand: Box:
Well Depth: Solid Pipe:
Stick Up Pipe: Screen Pipe:
Type of Drill Rig: Mobile B-53 (Track)
Casing Type: HW Size: 4" Depth: 22'6"
Hammer Weight: 300Lbs. Fall: 30"
Signs: Cones: Arrow-Board:
Sampler Type: SS Size: 1 3/8"
Automatic Hammer Weight:
Safety Hammer Weight: 140Lbs.
Donut Hammer Weight:
Fall: 30"
Core Barrel Type: NX Size: 2.15"

Penetration Resistance (N) Guide:

Cohesionless Soils (Sands, Gravels)		Cohesive Soils (Silts, Clays)	
Relative Density	Penetration Resistance	Consistency	Penetration Resistance
Very Loose	0 - 4	Very Soft	0 - 2
Loose	4 - 10	Soft	2 - 4
Medium Dense	10 - 30	Medium Stiff	4 - 8
Dense	30 - 50	Stiff	8 - 15
Very Dense	Over 50	Very Stiff	15 - 30
N=Sum of Second and Third 6" Blow Counts		Hard	Over 30

Terms Used for Second Entry of Descriptions: and = 40-50%, some = 10-40%, trace = 10% or less

TEST PIT LOG

Nobis — Engineering a Sustainable Future

PROJECT
Assabet River Rail Trail
MassDOT Project File No. 604531
1A Maple Street, Acton, Massachusetts

TEST PIT NO. TP-4
SHEET 1 of 1
FILE NO. 87860.00
CHKD BY GM

Engineer	Patrick Clarke	Make	Kubota	Ground El.	± 201
Contractor	New Hampshire Boring, Inc.	Model	KX 057-4	Datum	NAVD88
Operator	Dave Thompson	Capacity	~1/4 cy	Time Start	8:10
Weather	Light Snow, 30's	Reach	~12 feet	Date	1/30/2015

Depth Below Grade (ft)	Strata Change & Water Level	Subsurface Description	Excavation Effort	Boulder Qty/Class	Remarks
1	CRUSHED STONE 10"	G-1) Gray/brown fine to coarse GRAVEL (3-inch minus crushed stone), little fine to coarse Sand, trace Silt, very few cobbles, dry.	D	-	G-1 NRCS: Extremely Gravelly, Loamy Sand
2	FILL	G-2) Light to dark brown fine to coarse SAND, some Silt, little fine to coarse Gravel, few wood particles, fragments, pieces, and blocks (railroad ties), very few cobbles, very few brick fragments and pieces, moist (FILL).			G-2 NRCS: Sandy Loam
3		3.5'	M	1B	
4					
5	5'▽	G-3) Gray/brown with some orange staining beginning at depth of 5', fine to coarse SAND and Silt, trace fine to coarse Gravel, very few boulders, very few asphalt fragments, moist (FILL).	E	1A	G-3 NRCS: Sandy Loam
6				-	
7	▼7'				
	SAND	G-4) Gray with orange staining fine to medium SAND, little Silt, trace fine Gravel, wet.			G-4 NRCS: Loamy Sand
8		Bottom of excavation at 7.5 feet below ground surface.			
9					
10					
11					
12					
13					
14					
15					

Notes: 1) Frost depth approximately 2 feet.
2) Excavation backfilled with native soils.

WATER SYMBOLS
▼ Groundwater
▽ Estimated Seasonal High Groundwater

5' × 3' — N

BOULDER	CLASS
12" - 24"	A
24" - 36"	B
>36"	C

PROPORTIONS USED
0-10% Trace
10-20% Little
20-35% Some
35-50% And

EXCAVATION EFFORT
E = Easy
M = Moderate
D = Difficult

TEST PIT LOG

Nobis — Engineering a Sustainable Future

PROJECT
Assabet River Rail Trail
MassDOT Project File No. 604531
1A Maple Street, Acton, Massachusetts

TEST PIT NO. TP-5
SHEET 1 of 1
FILE NO. 87860.00
CHKD BY GM

Engineer	Patrick Clarke	Make	Kubota	Ground El.	± 200
Contractor	New Hampshire Boring, Inc.	Model	KX 057-4	Datum	NAVD88
Operator	Dave Thompson	Capacity	~1/4 cy	Time Start	11:15
Weather	Light Snow, 30's	Reach	~12 feet	Date	1/30/2015

Depth Below Grade (ft)	Strata Change & Water Level	Subsurface Description	Excavation Effort	Boulder Qty/Class	Remarks
1	CRUSHED STONE 10"	Gray/brown fine to coarse GRAVEL (3-inch minus crushed stone), little fine to coarse Sand, trace Silt, very few cobbles, dry.	D	-	Extremely Gravelly, Loamy Sand
2	FILL	G-1) Brown fine to coarse SAND and Silt, little fine to coarse Gravel, very few cobbles, very few brick fragments and pieces, very few wood fragments and pieces, moist (FILL).			G-1 NRCS: Sandy Loam
3			M		
4		G-2) Gray/dark brown fine to coarse SAND, some Silt, little fine to coarse Gravel, very few wood fragments, moist (FILL).			G-2 NRCS: Loamy Sand
5	TOPSOIL 5'▽	G-3) Black ORGANIC SILT, some fine Sand, very few roots, very few wood particles and fragments, moist (TOPSOIL).	E		G-3 NRCS: Silt Loam
6	SAND ▼6'-4"	G-4) Gray with orange staining fine to medium SAND, little Silt, trace fine Gravel, moist to wet			G-4 NRCS: Loamy Sand
7					
8		Bottom of excavation at 7 feet below ground surface.			
9					
10					
11					
12					
13					
14					
15					

Notes: 1) Frost depth approximately 2 feet.
2) Excavation backfilled with native soils.

WATER SYMBOLS
▼ Groundwater
▽ Estimated Seasonal High Groundwater

5' × 2.8' — N

BOULDER	CLASS
12" - 24"	A
24" - 36"	B
>36"	C

PROPORTIONS USED
0-10% Trace
10-20% Little
20-35% Some
35-50% And

EXCAVATION EFFORT
E = Easy
M = Moderate
D = Difficult

604531_HDI(KEY).DWG Plotted on 8-Oct-2015 12:54 PM

MAYNARD & ACTON
ASSABET RIVER RAIL TRAIL

STATE	FED. AID PROJ. NO.	SHEET NO.	TOTAL SHEETS
MA	CMAQ/STP-TE-002S(836)	6	230
PROJECT FILE NO.	604531		

BORING LOGS

---

massDOT MassHighway

NOBIS ENGINEERING, INC.
585 Middlesex Street
Lowell, MA 01851

Phone: (978) 683-0891
Fax: (978) 683-0966
www.nobisengineering.com

Boring No. B-3
Not to scale

City/Town: Acton & Maynard | Bridge: Boardwalk, Winter Street | Project File No: 604531 | Contract No: 68386

Project: Assabet River Rail Trail | Date Started: July 7, 2014 | Total Hours:

Groundwater Depth: NR | Date & Time: N/A | Date Completed: July 7, 2014 | 3

Coordinates: N 2988971.97 E 668148.16 | Driller's Name: Patrick Schofield | Helper's Name:

Ground Elevation: ± 202.5 | Inspector's Name: Patrick Clarke | Driller's Company: New Hampshire Boring, Inc.

Sample Number	Depth Range (Feet)	Blow Counts per 6 Inches Coring Times Minute Per Foot	Recovery Inches	Field Description	Strata Changes
S-1	0' - 2'	4 6 7 6	8"	S-1A (5"): Dry, medium dense, brown, FINE TO COARSE SAND, some fine to medium gravel, trace silt, trace roots (TOPSOIL).	5"
S-2	2' - 4'	6 5 6 6	0"	S-1B (3"): Dry, medium dense, light brown, FINE TO COARSE SAND, some fine to medium gravel, trace silt, some plastic fragments (FILL). S-2: No Recovery.	4'
S-3	4' - 6'	7 9 13 13	9"	S-3: Wet, medium dense, gray, FINE TO COARSE SAND, some silt, some fine to medium gravel.	
S-4	6' - 8'	15 17 16 18	18"	S-4: Wet, dense, gray, FINE TO COARSE SAND, some fine to medium gravel, trace silt.	
S-5	10' - 12'	4 6 13 10	24"	S-5: Wet, medium dense, gray, FINE TO COARSE SAND, some fine gravel, trace silt.	
S-6	15' - 17'			S-6: Approximately 18" of hollow stem augers filled with running sand at bottom of hole. Auger grinding at depth of 17 feet BGS on inferred glacial till or cobble.	
				Bottom of Exploration = 20'	

Notes:
1. NR = Not Recorded.
2. Ground surface elevation should be considered approximate.
3. Split spoon for Sample S-6 contained 18" of blown in sand.
4. Borehole collapsed due to running sands at 20'.
5. Borehole backfilled with native soil.

Protective Device - Stand: Box:
Well Depth: Solid Pipe:
Stick Up Pipe: Screen Pipe:
Type of Drill Rig: Truck / Diedrich D-50
Auger Type: HSA Size:2.25" Depth: 20'
Hammer Weight: 300Lbs. Fall: 30"
Signs: Cones: Arrow-Board:
Sampler Type: SS Size: 1 3/8"
Automatic Hammer Weight:
Safety Hammer Weight: 140Lbs.
Donut Hammer Weight: Fall: 30"
Core Barrel Type: Size:

Penetration Resistance (N) Guide:

Cohesionless Soils (Sands, Gravels)		Cohesive Soils (Silts, Clays)	
Relative Density	Penetration Resistance	Consistency	Penetration Resistance
Very Loose	0 - 4	Very Soft	0 - 2
Loose	4 - 10	Soft	2 - 4
Medium Dense	10 - 30	Medium Stiff	4 - 8
Dense	30 - 50	Stiff	8 - 15
Very Dense	Over 50	Very Stiff	15 - 30
N=Sum of Second and Third 6" Blow Counts		Hard	Over 30

Terms Used for Second Entry of Descriptions: and = 40-50%, some = 10-40%, trace = 10% or less

---

massDOT MassHighway

NOBIS ENGINEERING, INC.
585 Middlesex Street
Lowell, MA 01851

Phone: (978) 683-0891
Fax: (978) 683-0966
www.nobisengineering.com

Boring No. B-3A
Not to scale

City/Town: Acton & Maynard | Bridge: Boardwalk, Winter Street | Project File No: 604531 | Contract No: 68386

Project: Assabet River Rail Trail | Date Started: July 10, 2014 | Total Hours:

Groundwater Depth: 6.7' | Date & Time: 7/10/2014 10:15 AM | Date Completed: July 10, 2014 | 5

Coordinates: N 2988973.88 E 668142.47 | Driller's Name: Mike D'Ambrosia | Helper's Name:

Ground Elevation: ± 203 | Inspector's Name: Patrick Clarke | Driller's Company: New Hampshire Boring, Inc.

Sample Number	Depth Range (Feet)	Blow Counts per 6 Inches Coring Times Minute Per Foot	Recovery Inches	Field Description	Strata Changes
S-1	1' - 3'	4 6 5 3	12"	Dry, brown, FINE TO COARSE SAND, some fine to medium gravel, trace silt, trace roots (TOPSOIL).	4"
S-2	3' - 5'	3 5 6 11	14"	S-1: Dry, medium dense, brown, FINE TO COARSE SAND, some fine to medium gravel, some silt (FILL). S-2: Moist, medium dense, brown, FINE TO COARSE SAND, some fine gravel, trace silt, trace roots. tip of split spoon wet (FILL).	5'
S-3	5' - 7'	11 8 9 8	13"	S-3: Wet, medium dense, gray, FINE TO COARSE SAND, some fine gravel, some silt.	
S-4	7' - 9'	10 8 7 8	16"	S-4: Wet, medium dense, gray, FINE TO COARSE SAND, some fine gravel, trace silt.	
S-5	9' - 11'	5 7 8 10	22"	S-5: Wet, medium dense, gray, FINE TO COARSE SAND, some fine gravel, trace silt, trace medium gravel.	15'
S-6	15' - 15.7'	22 100/2"	7"	S-6: Wet, very dense, gray/brown, FINE TO COARSE SAND, some fine to medium gravel, some silt (GLACIAL TILL).	
S-7	20'-22'	24 14 22 19	7"	S-7: Wet, dense, gray, MEDIUM GRAVEL, some fine to coarse sand, some silt (GLACIAL TILL). Increased drilling resistance observed at 23.5'. Rock fragments observed in cuttings between 23.5' and 25.4'.	
S-8	25'-25.4'	100/5"	4"	S-8: Wet, very dense, white and brown, MEDIUM GRAVEL (rounded quartz fragments), trace fine to coarse sand, trace fine gravel, trace silt (GLACIAL TILL).	
				Bottom of Exploration = 25.4'	

Notes:
1. Ground surface elevation should be considered approximate.
2. Borehole hand excavated from 0' to 1' for utility clearance.
3. Borehole backfilled with drill cuttings.

Protective Device - Stand: Box:
Well Depth: Solid Pipe:
Stick Up Pipe: Screen Pipe:
Type of Drill Rig: Truck / Acker AD2
Casing Type: HW Size:4" Depth: 25'
Hammer Weight: 300Lbs. Fall: 30"
Signs: Cones: Arrow-Board:
Sampler Type: SS Size: 1 3/8"
Automatic Hammer Weight:
Safety Hammer Weight: 140Lbs.
Donut Hammer Weight: Fall: 30"
Core Barrel Type: Size:

Penetration Resistance (N) Guide:

Cohesionless Soils (Sands, Gravels)		Cohesive Soils (Silts, Clays)	
Relative Density	Penetration Resistance	Consistency	Penetration Resistance
Very Loose	0 - 4	Very Soft	0 - 2
Loose	4 - 10	Soft	2 - 4
Medium Dense	10 - 30	Medium Stiff	4 - 8
Dense	30 - 50	Stiff	8 - 15
Very Dense	Over 50	Very Stiff	15 - 30
N=Sum of Second and Third 6" Blow Counts		Hard	Over 30

Terms Used for Second Entry of Descriptions: and = 40-50%, some = 10-40%, trace = 10% or less

---

massDOT MassHighway

NOBIS ENGINEERING, INC.
585 Middlesex Street
Lowell, MA 01851

Phone: (978) 683-0891
Fax: (978) 683-0966
www.nobisengineering.com

Boring No. B-7
Not to scale

City/Town: Acton | Sylvia Street Retaining Wall | Project File No: 604531 | Contract No: 68386

Project: Assabet River Rail Trail | Date Started: March 19, 2015 | Total Hours:

Groundwater Depth: 0.7' | Date & Time: 3/19/2015 10:42 am | Date Completed: March 19, 2015 | 2.8

Coordinates: N 2990090.72 E 667768.05 | Driller's Name: Ben Cross | Helper's Name: Brett Raiche

Ground Elevation: ± 205 | Inspector's Name: Patrick Clarke | Driller's Company: New Hampshire Boring, Inc.

Sample Number	Depth Range (Feet)	Blow Counts per 6 Inches Coring Times Minute Per Foot	Recovery Inches	Field Description	Strata Changes
S-1	0' - 2'	WOH 7 13 9	12"	S-1A (6"): Wet, medium dense, brown, FINE TO COARSE SAND, some organic silt, little fine to medium gravel, trace roots (TOPSOIL).	0.5'
S-2	2' - 4'	11 17 25 25	7"	S-1B (6"): Wet, medium dense, gray/light brown with orange staining, FINE TO COARSE SAND, some fine to medium gravel, some inorganic silt (GLACIAL TILL).	
S-3	4' - 6'	22 17 26 54	16"	S-2: Wet, dense, gray with orange staining, FINE TO COARSE SAND, some inorganic silt, trace fine gravel (GLACIAL TILL).	
S-4	6' - 6'4"	100/4"	4"	S-3: Wet, dense, gray with orange staining, FINE TO COARSE SAND, some inorganic silt, some fine to coarse gravel (GLACIAL TILL.) S-4: Wet, very dense, gray with orange staining, FINE TO COARSE SAND, some inorganic silt, some fine to medium gravel (GLACIAL TILL).	
S-5	8' - 10'	55 59 38 48	14"	Increased drilling resistance observed at approximately 6.5 feet below ground surface.	
S-6	10' - 10'10"	46 100/4"	9.5"	S-5: Wet, very dense, gray with orange staining, FINE TO COARSE SAND, some fine to medium gravel, some inorganic silt (GLACIAL TILL).	10'
S-7	13' - 13'3"	100/3"	3"	S-6: Wet, very dense, dark brown/gray with orange staining, FINE TO COARSE GRAVEL, some fine to coarse sand, some inorganic silt (WEATHERED BEDROCK). S-7: Wet, very dense, gray with orange staining, FINE TO COARSE SAND, some inorganic silt, trace fine gravel (WEATHERED BEDROCK).	15'
				Increased drilling resistance and rock fragments observed in cuttings between approximately 15' and 18' below ground surface indicating probable transition into bedrock.	18'
				Bottom of Exploration = 18'	

Notes:
1. Ground surface elevation should be considered approximate.
2. Water induced during drilling process.
3. Borehole backfilled with drill cuttings.

Protective Device - Stand: Box:
Well Depth: Solid Pipe:
Stick Up Pipe: Screen Pipe:
Type of Drill Rig: Mobile B-53 (Track)
Casing Type: HW Size:4" Depth: 10'
Hammer Weight: 300Lbs. Fall: 30"
Signs: Cones: Arrow-Board:
Sampler Type: SS Size: 1 3/8"
Automatic Hammer Weight:
Safety Hammer Weight: 140Lbs.
Donut Hammer Weight: Fall: 30"
Core Barrel Type: Size:

Penetration Resistance (N) Guide:

Cohesionless Soils (Sands, Gravels)		Cohesive Soils (Silts, Clays)	
Relative Density	Penetration Resistance	Consistency	Penetration Resistance
Very Loose	0 - 4	Very Soft	0 - 2
Loose	4 - 10	Soft	2 - 4
Medium Dense	10 - 30	Medium Stiff	4 - 8
Dense	30 - 50	Stiff	8 - 15
Very Dense	Over 50	Very Stiff	15 - 30
N=Sum of Second and Third 6" Blow Counts		Hard	Over 30

Terms Used for Second Entry of Descriptions: and = 40-50%, some = 10-40%, trace = 10% or less

---

massDOT MassHighway

NOBIS ENGINEERING, INC.
585 Middlesex Street
Lowell, MA 01851

Phone: (978) 683-0891
Fax: (978) 683-0966
www.nobisengineering.com

Boring No. B-8
Not to scale

City/Town: Acton | Sylvia Street Retaining Wall | Project File No: 604531 | Contract No: 68386

Project: Assabet River Rail Trail | Date Started: March 18, 2015 | Total Hours:

Groundwater Depth: 0.6' | Date & Time: 3/18/2015 2:45 pm | Date Completed: March 18, 2015 | 2.5

Coordinates: N 2990158.65 E 667762.08 | Driller's Name: Ben Cross | Helper's Name: Brett Raiche

Ground Elevation: ± 203.5 | Inspector's Name: Patrick Clarke | Driller's Company: New Hampshire Boring, Inc.

Sample Number	Depth Range (Feet)	Blow Counts per 6 Inches Coring Times Minute Per Foot	Recovery Inches	Field Description	Strata Changes
S-1	0' - 2'	1 5 10 12	15"	S-1A (5"): Wet, medium dense, dark brown, FINE TO COARSE SAND and fine to coarse gravel, some organic silt, trace roots (TOPSOIL).	0.4'
S-2	2' - 4'	12 16 13 21	15"	S-1B (10"): Moist, medium dense, light gray/light brown, FINE TO COARSE SAND, some inorganic silt, some fine to medium gravel, trace roots (GLACIAL TILL).	
S-3	4' - 6'	18 23 52 80	14"	S-2): Wet, medium dense, light gray with orange and red staining, INORGANIC SILT and fine to coarse sand, trace fine gravel (GLACIAL TILL). [Laboratory Analysis Performed: Silt: 55.5%, Sand: 40.5%, Gravel: 4%.]	
S-4	6' - 7'10"	36 49 53 100/4"	12"	S-3): Moist, very dense, gray/light brown with orange staining, FINE TO COARSE SAND and fine to coarse gravel, some inorganic silt (GLACIAL TILL).	8'
S-5	10' - 10'	50/0"	0"	S-4): Moist, very dense, gray with white and orange staining, FINE TO COARSE SAND and fine to coarse gravel, some inorganic silt (GLACIAL TILL). Increased drilling resistance and rock fragments observed in cuttings between approximately 8' and 13' below ground surface indicating probable transition into bedrock. S-5: No recovery.	13'
				Bottom of Exploration = 13'	

Notes:
1. Ground surface elevation should be considered approximate.
2. Water induced during drilling and coring processes.
3. Borehole backfilled with drill cuttings.

Protective Device - Stand: Box:
Well Depth: Solid Pipe:
Stick Up Pipe: Screen Pipe:
Type of Drill Rig: Mobile B-53 (Track)
Casing Type: HW Size:4" Depth: 10'
Hammer Weight: 300Lbs. Fall: 30"
Signs: Cones: Arrow-Board:
Sampler Type: SS Size: 1 3/8"
Automatic Hammer Weight:
Safety Hammer Weight: 140Lbs.
Donut Hammer Weight: Fall: 30"
Core Barrel Type: Size:

Penetration Resistance (N) Guide:

Cohesionless Soils (Sands, Gravels)		Cohesive Soils (Silts, Clays)	
Relative Density	Penetration Resistance	Consistency	Penetration Resistance
Very Loose	0 - 4	Very Soft	0 - 2
Loose	4 - 10	Soft	2 - 4
Medium Dense	10 - 30	Medium Stiff	4 - 8
Dense	30 - 50	Stiff	8 - 15
Very Dense	Over 50	Very Stiff	15 - 30
N=Sum of Second and Third 6" Blow Counts		Hard	Over 30

Terms Used for Second Entry of Descriptions: and = 40-50%, some = 10-40%, trace = 10% or less

---

massDOT MassHighway

NOBIS ENGINEERING, INC.
585 Middlesex Street
Lowell, MA 01851

Phone: (978) 683-0891
Fax: (978) 683-0966
www.nobisengineering.com

Boring No. B-9
Not to scale

City/Town: Acton | Sylvia Street Retaining Wall | Project File No: 604531 | Contract No: 68386

Project: Assabet River Rail Trail | Date Started: March 18, 2015 | Total Hours:

Groundwater Depth: 1.2' | Date & Time: 3/18/2015 11:50 am | Date Completed: March 18, 2015 | 3.3

Coordinates: N 2990209.35 E 667774.06 | Driller's Name: Ben Cross | Helper's Name: Brett Raiche

Ground Elevation: ± 206 | Inspector's Name: Patrick Clarke | Driller's Company: New Hampshire Boring, Inc.

Sample Number	Depth Range (Feet)	Blow Counts per 6 Inches Coring Times Minute Per Foot	Recovery Inches	Field Description	Strata Changes
S-1	0' - 2'	2 5 4 3	4"	S-1: Wet, loose, dark brown, FINE TO COARSE SAND and fine to coarse gravel, some organic silt, trace roots (TOPSOIL).	2'
S-2	2' - 4'	11 29 21 29	2"	S-2: Wet, dense, brown, INORGANIC SILT and fine to coarse sand, some fine to medium gravel, trace roots (GLACIAL TILL).	
S-3	4' - 6'	33 127 16 18	7.5"	S-3: Wet, very dense, brown, FINE TO COARSE SAND, some inorganic silt, trace fine to medium gravel, trace roots (GLACIAL TILL).	
S-4	6' - 8'	9 7 17 27	20"	S-4: Wet, medium dense, brown with some orange mottling, FINE TO COARSE SAND and inorganic silt, trace fine gravel, trace roots, (GLACIAL TILL).	8'
S-5	8' - 8'2"	100/2"	2"	S-5: Wet, very dense, gray/light brown, FINE TO MEDIUM GRAVEL and fine to coarse sand, some inorganic silt (WEATHERED BEDROCK).	8.2'
				Increased drilling resistance and rock fragments observed in cuttings between approximately 8' and 14' below ground surface indicating probable transition into bedrock.	
				Bottom of Exploration = 14'	14'

Notes:
1.Ground surface elevation should be considered approximate.
2. Water induced during drilling and coring processes.
3. Borehole backfilled with drill cuttings.

Protective Device - Stand: Box:
Well Depth: Solid Pipe:
Stick Up Pipe: Screen Pipe:
Type of Drill Rig: Mobile B-53 (Track)
Casing Type: HW Size:4" Depth: 8'
Hammer Weight: 300Lbs. Fall: 30"
Signs: Cones: Arrow-Board:
Sampler Type: SS Size: 1 3/8"
Automatic Hammer Weight:
Safety Hammer Weight: 140Lbs.
Donut Hammer Weight: Fall: 30"
Core Barrel Type: Size:

Penetration Resistance (N) Guide:

Cohesionless Soils (Sands, Gravels)		Cohesive Soils (Silts, Clays)	
Relative Density	Penetration Resistance	Consistency	Penetration Resistance
Very Loose	0 - 4	Very Soft	0 - 2
Loose	4 - 10	Soft	2 - 4
Medium Dense	10 - 30	Medium Stiff	4 - 8
Dense	30 - 50	Stiff	8 - 15
Very Dense	Over 50	Very Stiff	15 - 30
N=Sum of Second and Third 6" Blow Counts		Hard	Over 30

Terms Used for Second Entry of Descriptions: and = 40-50%, some = 10-40%, trace = 10% or less

---

massDOT MassHighway

NOBIS ENGINEERING, INC.
585 Middlesex Street
Lowell, MA 01851

Phone: (978) 683-0891
Fax: (978) 683-0966
www.nobisengineering.com

Boring No. BB-3
Not to scale

City/Town: Acton | Bridge: A-02-042 (BP6) | Project File No: 604531 | Contract No: 68386

Project: Assabet River Rail Trail | Date Started: March 16, 2015 | Total Hours:

Groundwater Depth: 5'7" | Date & Time: 3/16/2015 1:25 pm | Date Completed: March 16, 2015 | 5.5

Coordinates: N 2991695.19 E 668094.26 | Driller's Name: Ben Cross | Helper's Name: Brett Raiche

Ground Elevation: ± 196 | Inspector's Name: Patrick Clarke | Driller's Company: New Hampshire Boring, Inc.

Sample Number	Depth Range (Feet)	Blow Counts per 6 Inches Coring Times Minute Per Foot	Recovery Inches	Field Description	Strata Changes
S-1	0' - 2'	2 5 4 3	7"	S-1A (5"): Wet, loose, brown, FINE TO COARSE GRAVEL and fine to coarse sand, some organic silt, trace roots (TOPSOIL).	0.4'
S-2	3'6" - 5'6"	32 18 11 9	2"	S-1B (2"): Wet, loose, light brown, FINE TO COARSE SAND, some inorganic silt, some fine to medium gravel, trace roots (FILL). S-2: Wet, medium dense, light brown, FINE TO COARSE SAND and fine to coarse gravel, some inorganic silt (FILL).	
S-3	5'6" - 7'6"	4 2 2 2	6"	S-3A (4"): Wet, very loose, light brown, FINE TO COARSE SAND and inorganic silt, some medium to coarse gravel (FILL).	
S-4	7'6" - 9'6"	4 WOH WOH WOH	11"	S-3B (2"): Wet, very loose, dark gray, FINE TO COARSE SAND and inorganic silt, trace roots (FILL). S-4: Wet, very loose, olive/gray/light brown, FINE TO COARSE SAND and inorganic silt, trace roots (FILL).	9.5'
S-5	9'6" - 11'6"	11 11 5 4	9"	S-5: Wet, medium dense, brown, INORGANIC SILT and fine sand (SILT). [Laboratory Analysis Performed: Sample determined to be non-plastic. Moisture Content = 38%.]	
S-6	11'6" - 13'6"	7 23 25 24	24"	S-6A (14"): Wet, dense, brown, INORGANIC SILT and fine sand. 2" of ORGANIC SILT observed at transition (SILT).	
S-7	13'6" - 15'6"	15 15 20 20	7"	S-6B (10"): Wet, dense, gray, FINE TO COARSE SAND, some inorganic silt, some fine to coarse gravel, trace roots (GLACIAL TILL). S-7: Wet, dense, gray, FINE TO COARSE SAND, some inorganic silt, some fine to coarse gravel, trace roots (GLACIAL TILL). [Laboratory Analysis Performed: Sand: 45.1%, Silt: 27.8%, Gravel: 27.1%.]	12.7'
				Increased drilling resistance and cuttings observed indicate probable transition into weathered bedrock.	17'
S-8	18'6" - 18'7"	100/1"	1"	S-8: Wet, very dense, gray, FINE TO COARSE SAND, some fine to medium gravel, trace inorganic silt (WEATHERED BEDROCK).	19'
C-1	19' - 24'3"	9 3 4.3 4.8 8 2/3"	51"	C-1: Moderately hard, moderately weathered, extremely to slightly fractured, gray with dark gray bedding, very fine to medium grained GNEISS, very close to close, shallow to steeply dipping open and closed joints. Percent Recovery =81%, RQD = 38%	
C-2	24'3" - 29'3"	0.8 3.3 7 7.5 9.3	50.5"	C-2: Hard, slightly to very slightly weathered, extremely fractured to sound, gray with dark gray bedding, very fine to medium grained GNEISS, very close to moderately close, shallow to steeply dipping closed joints. Percent Recovery = 84%, RQD = 68%	29.3'
				Bottom of Exploration = 29'3"	

Notes:
1.Ground surface elevation should be considered approximate.
2. Boring drilled approximately 14'-7" south of existing railroad bridge south abutment.
3. Surface water in Mill Pond frozen and measured at approximately 6' below existing railroad bridge deck.
4. Water induced during drilling and coring processes.
5. Borehole backfilled with drill cuttings.

Protective Device - Stand: Box:
Well Depth: Solid Pipe:
Stick Up Pipe: Screen Pipe:
Type of Drill Rig: Mobile B-53 (Track)
Casing Type: HW Size: 4" Depth: 18'6"
Hammer Weight: 300Lbs. Fall: 30"
Signs: Cones: Arrow-Board:
Sampler Type: SS Size: 1 3/8"
Automatic Hammer Weight:
Safety Hammer Weight: 140Lbs.
Donut Hammer Weight: Fall: 30"
Core Barrel Type: NX Size: 2.15"

Penetration Resistance (N) Guide:

Cohesionless Soils (Sands, Gravels)		Cohesive Soils (Silts, Clays)	
Relative Density	Penetration Resistance	Consistency	Penetration Resistance
Very Loose	0 - 4	Very Soft	0 - 2
Loose	4 - 10	Soft	2 - 4
Medium Dense	10 - 30	Medium Stiff	4 - 8
Dense	30 - 50	Stiff	8 - 15
Very Dense	Over 50	Very Stiff	15 - 30
N=Sum of Second and Third 6" Blow Counts		Hard	Over 30

Terms Used for Second Entry of Descriptions: and = 40-50%, some = 10-40%, trace = 10% or less

604531_HD(KEY).DWG Plotted on 8-Oct-2015 12:53 PM

MAYNARD & ACTON
ASSABET RIVER RAIL TRAIL

STATE	FED. AID PROJ. NO.	SHEET NO.	TOTAL SHEETS
MA	CMAQ/STP-TE-002S(836)	5	230
PROJECT FILE NO.	604531		

BORING LOGS

Plotted on 8-Oct-2015 12:53 PM

604531_HD(KEY).DWG

TEST PIT LOG

Nobis — Engineering a Sustainable Future

PROJECT		
Assabet River Rail Trail	TEST PIT NO.	TP-2
Pedestrian Bridge Over Assabet River	SHEET	1 of 1
Maynard, Massachusetts	FILE NO.	87860.01
	CHKD BY	J. Kalafatis

Engineer	Patrick Clarke	Make	Caterpillar	Ground El.	±159.5
Contractor	Crawford Drilling	Model	305C	Datum	NAVD88
Operator	Alfred Alan	Capacity	1/4 CY	Time Start	9:25
Weather	Rain, 60's	Reach	10'	Date	10/15/2014

Depth Below Grade (ft)	Strata Change & Water Level	Subsurface Description	Excavation Effort	Boulder Qty/Class	Remarks
1	4" TOPSOIL 8" SUBSOIL	4": Dark Brown, fine to medium SAND, some Silt, very few roots, dry (TOPSOIL). 8": Brown brown, fine to medium SAND, little Silt, few tree roots, dry (SUBSOIL).	E		Tree Roots
2	FILL	Light brown fine to medium SAND, some fine to coarse Gravel, little Silt, very few wood fragments, very few cobbles, dry (FILL).		-	
3	BALLAST FILL	Dark brown to black, fine to coarse GRAVEL, little fine to coarse Sand, trace Silt, dry (BALLAST FILL).	M		-
4–5	FILL	Light brown fine to medium SAND, some fine to coarse Gravel, little Silt, very few wood fragments, very few cobbles, dry (FILL).	E		
6		Bottom of exploration depth of 5'			
7					
8					
9					
10					
11					
12					
13					
14					
15					

Notes: 1) Water not encountered in test pit. Water level in nearby river measured to be approximately 9'-10" below the existing bridge deck.
2) Test pit backfilled with native soil and reseeded with grass seed at ground surface.

WATER SYMBOLS: Groundwater; Estimated Seasonal High Groundwater

Pit dimensions: 9.5' × 4.1' (N arrow)

BOULDER	CLASS	PROPORTIONS USED		EXCAVATION EFFORT
12" - 24"	A	0-10%	Trace	E = Easy
24" - 36"	B	10-20%	Little	M = Moderate
>36"	C	20-35%	Some	D = Difficult
		35-50%	And	

---

massDOT Highway

NOBIS ENGINEERING, INC., 585 Middlesex Street, Lowell, MA 01851 — Phone: (978) 683-0891, Fax: (978) 683-0966, www.nobisengineering.com

Boring No. BB-1 — Not to scale

City/Town: Acton & Maynard	Bridge: Pedestrian Bridge, No. M-10-012	Project File No: 604531	Contract No: 68386
Project: Assabet River Rail Trail	Date Started: August 19, 2014	Total Hours: 8	
Groundwater Depth: 8'10" Date & Time: 8/19/2014 1:05 pm	Date Completed: August 19, 2014		
Coordinates: N 2982561.11 E 668171.28	Driller's Name: Kenneth Smith	Helper's Name: Matt	
Ground Elevation: ± 162.5	Inspector's Name: Patrick Clarke	Driller's Company: New Hampshire Boring, Inc.	

Sample Number	Depth Range (Feet)	Blow Counts per 6 Inches / Coring Times Minute Per Foot				Recovery Inches	Field Description	Strata Changes
S-1	0' - 2'	4	6	7	7	13"	S-1A (4"): Dry, medium dense, brown, FINE SAND, some silt, trace fine gravel, some roots, faint organic-like odor (TOPSOIL).	4"
S-2	2' - 4'	3	4	5	4	8"	S-1B (2"): Dry, medium dense, gray/brown, FINE TO MEDIUM SAND, some silt, some fine gravel, trace roots (FILL). S-1C (7"): Dry, medium dense, brown, FINE TO MEDIUM SAND AND FINE TO COARSE GRAVEL, trace silt, trace wood fragments (FILL). S-2: Dry, loose, tan/light brown, FINE TO COARSE SAND, some fine to coarse gravel, trace silt, trace wood fragments (FILL).	
S-3	4' - 6'	4	5	6	14	9"	S-3: Dry, medium dense, tan/light brown, FINE TO COARSE SAND, some fine gravel, trace silt, trace wood fragments (FILL).	
S-4	6' - 8'	8	4	5	16	12"	S-4: Dry, loose, tan/light brown, FINE TO COARSE SAND, trace silt, trace fine gravel, some wood fragments (FILL).	
S-5	8' - 9'4"	13	12	100/4"		8"	S-5: Dry, very dense, light brown with black mottling, FINE TO COARSE SAND, some fine to coarse gravel, some silt, trace wood particles (FILL).	9'4"
C-1	9'4" - 12'	7	4.5	5			Top of BEDROCK at 9'3" C-1 Hard, moderately weathered, extremely to slightly fractured, light gray with brown staining, very fine to medium grained, GNEISS, very close to close, horizontal to low angle joints. Percent Recovery = 77%, RQD = 60%.	
C-2	12' - 15'6"	1.3	5	6.3	7		C-2 Hard, very slightly weathered, extremely fractured to sound, gray, fine grained, GNEISS, close, horizontal to low angle joints. Percent Recovery = 95%, RQD = 73%.	
							Bottom of Exploration = 15'6"	

Notes:
1. Ground surface elevation should be considered approximate.
2. Nearest existing bridge abutment top of footing measured to be approximately 10 feet below existing bridge deck. Assabet River is approximately 10'9" below existing bridge deck.
3. Bedrock outcrops observed at river bottom.
4. Borehole backfilled with drill cuttings, sand, and nearby crushed stone.

Protective Device - Stand: Box:
Well Depth: Solid Pipe:
Stick Up Pipe: Screen Pipe:
Type of Drill Rig: Acker Soil Scout
Casing Type: HW Size: 4" Depth: 9'4"
Hammer Weight: 300Lbs. Fall: 30"
Signs: Cones: Arrow-Board:
Sampler Type: SS Size: 1 3/8"
Automatic Hammer Weight:
Safety Hammer Weight:
Donut Hammer Weight: 140Lbs. Fall: 30"
Core Barrel Type: NX Size: 2.15"

Penetration Resistance (N) Guide:

Cohesionless Soils (Sands, Gravels)		Cohesive Soils (Silts, Clays)	
Relative Density	Penetration Resistance	Consistency	Penetration Resistance
Very Loose	0 - 4	Very Soft	0 - 2
Loose	4 - 10	Soft	2 - 4
Medium Dense	10 - 30	Medium Stiff	4 - 8
Dense	30 - 50	Stiff	8 - 15
Very Dense	Over 50	Very Stiff	15 - 30
N=Sum of Second and Third 6" Blow Counts		Hard	Over 30

Terms Used for Second Entry of Descriptions: and = 40-50%, some = 10-40%, trace = 10% or less

---

TEST PIT LOG

Nobis — Engineering a Sustainable Future

PROJECT		
Assabet River Rail Trail	TEST PIT NO.	TP-3
Pedestrian Bridge Over Assabet River	SHEET	1 of 1
Maynard, Massachusetts	FILE NO.	87860.01
	CHKD BY	J. Kalafatis

Engineer	Patrick Clarke	Make	Caterpillar	Ground El.	±162.0
Contractor	Crawford Drilling	Model	305C	Datum	NAVD88
Operator	Alfred Alan	Capacity	1/4 CY	Time Start	10:30
Weather	Rain, 60's	Reach	10'	Date	10/15/2014

Depth Below Grade (ft)	Strata Change & Water Level	Subsurface Description	Excavation Effort	Boulder Qty/Class	Remarks
1	4" TOPSOIL 8" SUBSOIL	4": Dark Brown, fine to medium SAND, some Silt, very few roots, dry 8": Brown brown, fine to medium SAND, some Silt, very few roots, dry	E	-	Roots
2	FILL	Brown, fine to coarse SAND, little Silt, trace fine to coarse Gravel, very few wood particles, fragments, and pieces (Railroad Tie), very few asphalt fragments, very few ceramic pieces (Ceramic Pipe), very few glass fragments, very few brick pieces, very few metal pieces (Rebar), dry	M	1C	-
3				1A	Rebar, Railroad Tie
4					Ceramic Pipe
5	BALLAST FILL	Black, fine to coarse Gravel, trace fine to coarse Sand, trace Silt, dry			Red Staining at 5' BGS
6–8	SAND	Tan, fine to medium SAND, trace Silt, trace fine Gravel, dry	E	-	-
9		Bottom of exploration depth of 8.5' BGS.			
10					
11					
12					
13					
14					
15					

Notes: 1) Water not encountered in test pit. Water level in nearby river measured to be approximately 9'-10" below the existing bridge deck.
2) Test pit backfilled with native soil.

WATER SYMBOLS: Groundwater; Estimated Seasonal High Groundwater

Pit dimensions: 13.5' × 4.5' (N arrow)

BOULDER	CLASS	PROPORTIONS USED		EXCAVATION EFFORT
12" - 24"	A	0-10%	Trace	E = Easy
24" - 36"	B	10-20%	Little	M = Moderate
>36"	C	20-35%	Some	D = Difficult
		35-50%	And	

TEST PIT LOG

Nobis — Engineering a Sustainable Future

PROJECT		
Assabet River Rail Trail	TEST PIT NO.	TP-3A
Pedestrian Bridge Over Assabet River	SHEET	1 of 2
Maynard, Massachusetts	FILE NO.	87860.01
	CHKD BY	J. Kalafatis

Engineer	Patrick Clarke	Make	Caterpillar	Ground El.	±162.0
Contractor	Crawford Drilling	Model	305C	Datum	NAVD88
Operator	Alfred Alan	Capacity	1/4 CY	Time Start	12:00
Weather	Rain, 60's	Reach	10'	Date	10/15/2014

Depth Below Grade (ft)	Strata Change & Water Level	Subsurface Description	Excavation Effort	Boulder Qty/Class	Remarks
1	4" TOPSOIL 8" SUBSOIL	4": Dark Brown, fine to medium SAND, some Silt, very few roots, dry (TOPSOIL). 8": Brown brown, fine to medium SAND, some Silt, very few roots, dry (SUBSOIL).	E	-	Roots
2–3	FILL	GRANITE BLOCKS; Brown, fine to coarse SAND, little Silt, trace fine to coarse Gravel, very few wood fragments, dry (FILL).	E (D on Granite)	-	-
4		Bottom of exploration depth of 3.5' BGS.			
5					
6					
7					
8					
9					
10					
11					
12					
13					
14					
15					

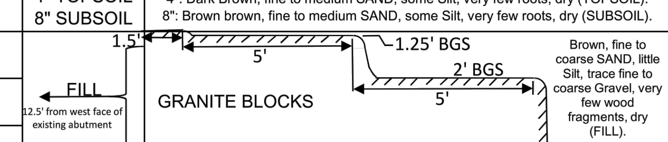

Notes: 1) Water not encountered in test pit. Water level in nearby river measured to be approximately 9'-10" below the existing bridge deck.
2) Test pit backfilled with native soil.

WATER SYMBOLS: Groundwater; Estimated Seasonal High Groundwater

Pit dimensions: 17' × 4' (N arrow)

BOULDER	CLASS	PROPORTIONS USED		EXCAVATION EFFORT
12" - 24"	A	0-10%	Trace	E = Easy
24" - 36"	B	10-20%	Little	M = Moderate
>36"	C	20-35%	Some	D = Difficult
		35-50%	And	

---

massDOT Highway

NOBIS ENGINEERING, INC., 585 Middlesex Street, Lowell, MA 01851 — Phone: (978) 683-0891, Fax: (978) 683-0966, www.nobisengineering.com

Boring No. B-1 — Not to scale

City/Town: Acton & Maynard	Bridge: Boardwalk, Winter Street	Project File No: 604531	Contract No: 68386
Project: Assabet River Rail Trail	Date Started: July 7, 2014	Total Hours: 2	
Groundwater Depth: NR Date & Time: N/A	Date Completed: July 7, 2014		
Coordinates: N 2988868.67 E 668480.60	Driller's Name: Patrick Schofield	Helper's Name:	
Ground Elevation: ± 200.5	Inspector's Name: Patrick Clarke	Driller's Company: New Hampshire Boring, Inc.	

Sample Number	Depth Range (Feet)	Blow Counts per 6 Inches / Coring Times Minute Per Foot				Recovery Inches	Field Description	Strata Changes
							ASPHALT (4")	4"
S-1	0.5' - 2.5'	5	10	8	9	15"	S-1A (7"): Dry, medium dense, light brown, FINE TO COARSE SAND AND FINE TO MEDIUM GRAVEL, trace silt (FILL). S-1B (8"): Dry, medium dense, dark gray, FINE TO COARSE SAND AND FINE TO MEDIUM GRAVEL, some silt (FILL).	
S-2	2.5' - 4.5'	5	7	6	8	12"	S-2: Moist, medium dense, gray, FINE TO COARSE SAND, some silt, some fine to medium gravel, faint organic odor (FILL).	
S-3	4.5' - 6.5'	4	10	8	8	18"	S-3A (14"): Moist, medium dense, dark gray, FINE TO COARSE SAND, some fine to medium gravel, faint organic odor (FILL). S-3B (4"): Moist, medium dense, gray, FINE TO COARSE SAND AND SILT, some medium gravel (GLACIAL TILL).	5.7'
S-4	6.5' - 6.8'	50/3"				3"	S-4: Wet, very dense, gray, FINE TO COARSE SAND AND SILT, some fine to medium gravel (GLACIAL TILL). Augered through inferred boulder/cobble between 6.8' and 8'.	
S-5	8' - 8.4'	50/5"				4"	S-5: Wet, very dense, gray, MEDIUM GRAVEL, some fine to coarse sand, some silt (GLACIAL TILL).	
							Bottom of Exploration = 8.4'	

Notes:
1. NR = Not Recorded.
2. Ground surface elevation should be considered approximate.
3. Water level in nearby pond approximately 3 feet below grade at boring location.
4. Auger refusal on probable boulder at 6.8' below grade. Borehole moved approximately 5.5' east and advanced to Sample B-5.
5. Borehole backfilled with native soil and asphalt patched at surface.

Protective Device - Stand: Box:
Well Depth: Solid Pipe:
Stick Up Pipe: Screen Pipe:
Type of Drill Rig: Truck / Diedrich D-50
Auger Type: HSA Size: 2.25" Depth: 8'
Hammer Weight: 300Lbs. Fall: 30"
Signs: Cones: Arrow-Board:
Sampler Type: SS Size: 1 3/8"
Automatic Hammer Weight:
Safety Hammer Weight: 140Lbs.
Donut Hammer Weight: Fall: 30"
Core Barrel Type: Size:

Penetration Resistance (N) Guide:

Cohesionless Soils (Sands, Gravels)		Cohesive Soils (Silts, Clays)	
Relative Density	Penetration Resistance	Consistency	Penetration Resistance
Very Loose	0 - 4	Very Soft	0 - 2
Loose	4 - 10	Soft	2 - 4
Medium Dense	10 - 30	Medium Stiff	4 - 8
Dense	30 - 50	Stiff	8 - 15
Very Dense	Over 50	Very Stiff	15 - 30
N=Sum of Second and Third 6" Blow Counts		Hard	Over 30

Terms Used for Second Entry of Descriptions: and = 40-50%, some = 10-40%, trace = 10% or less

---

massDOT Highway

NOBIS ENGINEERING, INC., 585 Middlesex Street, Lowell, MA 01851 — Phone: (978) 683-0891, Fax: (978) 683-0966, www.nobisengineering.com

Boring No. B-2 — Not to scale

City/Town: Acton & Maynard	Bridge: Boardwalk, Winter Street	Project File No: 604531	Contract No: 68386
Project: Assabet River Rail Trail	Date Started: July 7, 2014	Total Hours: 3	
Groundwater Depth: 5.4' Date & Time: 7/7/2014 11:15 AM	Date Completed: July 7, 2014		
Coordinates: N 2988975.52 E 668424.47	Driller's Name: Patrick Schofield	Helper's Name:	
Ground Elevation: ± 199	Inspector's Name: Patrick Clarke	Driller's Company: New Hampshire Boring, Inc.	

Sample Number	Depth Range (Feet)	Blow Counts per 6 Inches / Coring Times Minute Per Foot				Recovery Inches	Field Description	Strata Changes
S-1	0' - 2'	1	1	1	2	11"	S-1: Moist, loose, black ORGANIC SILT, some fine sand, trace roots, trace wood particles and fragments, faint organic odor (TOPSOIL).	2'
S-2	2' - 4'	11	7	5	5	12"	S-2: Wet, stiff, dark brown to black, ORGANIC CLAYEY SILT, some fine to coarse sand, some medium gravel, trace roots, trace wood fragments, very faint organic odor, some silt (ORGANIC DEPOSITS).	4'
S-3	4' - 6'	1	WOH	3	5	5"	S-3: Wet, very loose, gray MEDIUM GRAVEL, some fine to coarse sand, some silt, trace pockets of organic silt, faint organic odor.	
S-4	6' - 8'	3	10	13	17	12"	S-4: Wet, medium dense, gray, FINE TO COARSE SAND AND SILT, some fine to medium gravel, trace organic silt, trace roots.	
S-5	8' - 10'	20	14	13	13	5"	S-5: Wet, medium dense, gray, FINE TO MEDIUM GRAVEL AND FINE TO COARSE SAND, some silt.	13.75'
							Heavy drilling resistance at 13.75' indicating probable strata change.	
S-5	15' - 17'	21	36	50	58	9"	S-6: Wet, very dense, gray, SILT AND FINE TO COARSE SAND, some fine to medium gravel (GLACIAL TILL). Increased drilling resistance between 17' and 18'.	
S-6	19' - 20.6'	32	19	32	50/1"	8"	S-7: Wet, very dense, gray, FINE TO COARSE SAND, some fine to coarse gravel, some silt. Angular, probable cobble fragments in bottom of split-spoon (GLACIAL TILL).	
							Bottom of Exploration = 20.6'	

Notes:
1. Ground surface elevation should be considered approximate.
2. Boring drilled adjacent to wetland areas to the west and east. Water level approximately 1' below ground surface at boring location.
3. Borehole backfilled with drill cuttings.

Protective Device - Stand: Box:
Well Depth: Solid Pipe:
Stick Up Pipe: Screen Pipe:
Type of Drill Rig: Truck / Diedrich D-50
Casing Type: HW Size: 4" Depth: 9'4"
Hammer Weight: 300Lbs. Fall: 30"
Signs: Cones: Arrow-Board:
Sampler Type: SS Size: 1 3/8"
Automatic Hammer Weight:
Safety Hammer Weight: 140Lbs.
Donut Hammer Weight: Fall: 30"
Core Barrel Type: Size:

Penetration Resistance (N) Guide:

Cohesionless Soils (Sands, Gravels)		Cohesive Soils (Silts, Clays)	
Relative Density	Penetration Resistance	Consistency	Penetration Resistance
Very Loose	0 - 4	Very Soft	0 - 2
Loose	4 - 10	Soft	2 - 4
Medium Dense	10 - 30	Medium Stiff	4 - 8
Dense	30 - 50	Stiff	8 - 15
Very Dense	Over 50	Very Stiff	15 - 30
N=Sum of Second and Third 6" Blow Counts		Hard	Over 30

Terms Used for Second Entry of Descriptions: and = 40-50%, some = 10-40%, trace = 10% or less

MAYNARD & ACTON
ASSABET RIVER RAIL TRAIL

STATE	FED. AID PROJ. NO.	SHEET NO.	TOTAL SHEETS
MA	CMAQ/STP-TE-002S(836)	4	230
PROJECT FILE NO.	604531		

BORING LOGS

---

massDOT Highway

NOBIS ENGINEERING, INC.
585 Middlesex Street
Lowell, MA 01851

Phone: (978) 683-0891
Fax: (978) 683-0966
www.nobisengineering.com

Boring No. B-4
Not to scale

City/Town: Acton & Maynard | Bridge: Winter Street | Project File No: 604531 | Contract No: 68386
Project: Assabet River Rail Trail | Date Started: July 8, 2014 | Total Hours:
Groundwater Depth: 13' | Date & Time: 7/8/2014 1:00 PM | Date Completed: July 8, 2014 | 5
Coordinates: N 2980692.68 E 665438.23 | Driller's Name: Pat Schofield | Helper's Name:
Ground Elevation: ± 190 | Inspector's Name: Patrick Clarke | Driller's Company: New Hampshire Boring, Inc.

Sample Number	Depth Range (Feet)	Blow Counts per 6 Inches	Coring Times Minute Per Foot			Recovery Inches	Field Description	Strata Changes
S-1	0' - 2'	5	18	15	12	11"	S-1A (6") Dry, dense, brown, FINE TO COARSE SAND, some fine gravel, some silt (FILL).	
S-2	2' - 4'	14	12	18	20	0"	S-2: No Recovery.	
S-3	4' - 6'	8	12	6	6	8"	S-3: Wet, medium dense, brown, FINE TO MEDIUM GRAVEL AND FINE TO COARSE SAND, some silt (FILL).	
S-4	6' - 8'	2	1	4	2	7"	S-4: Wet, loose, brown, FINE TO COARSE SAND, some silt, some fine to coarse gravel (FILL).	
								8'
S-5	8' - 10'	10	7	8	3	4"	S-5: Wet, medium dense, dark brown, FINE TO COARSE SAND AND SILT, some fine gravel, trace roots.	
								10.4'
S-6	10' - 12'	11	6	7	19	13"	S-6A (5"): Wet, medium dense, brown, FINE TO COARSE SAND, some silt, some fine to medium gravel.	
								12'
S-7	12' - 14'	23	23	26	20	15"	S-6B (8"): Wet, medium dense, dark brown/black, FINE SAND, some organic silt, trace root fibers, trace wood particles and fragments SAND WITH ORGANICS).	
							S-7: Wet, dense, tan, FINE TO COARSE SAND, some silt, trace medium gravel.	
							Drill action indicates probable intermittent cobbles between 14.5' and 19'.	
S-8	19'-21'	9	7	7	14	4"	S-8: Wet, medium dense, gray, FINE TO COARSE SAND AND FINE TO MEDIUM GRAVEL (rounded cobble fragments), trace silt.	
								24'
S-9	24'-26'	18	9	4	6	6"	S-9: Wet, medium dense, gray, SILT AND FINE TO COARSE SAND, some fine to medium gravel, trace silt.	
							Increased drilling resistance between 28' and 29' indicating probable strata change.	28'
S-9	29'-29.1'	50/1"				1"	S-10: Wet, very dense, gray, FINE TO MEDIUM GRAVEL, some fine to coarse sand (weathered rock particles and fragments). Sample recovered from split spoon tip (WEATHERED BEDROCK).	
							Bottom of Exploration = 29.1'	

Notes:
1. Ground surface elevation should be considered approximate.
2. Borehole backfilled with drill cuttings.

Protective Device - Stand: Box:
Well Depth: Solid Pipe:
Stick Up Pipe: Screen Pipe:

Penetration Resistance (N) Guide:

Cohesionless Soils (Sands, Gravels)		Cohesive Soils (Silts, Clays)	
Relative Density	Penetration Resistance	Consistency	Penetration Resistance
Very Loose	0 - 4	Very Soft	0 - 2
Loose	4 - 10	Soft	2 - 4
Medium Dense	10 - 30	Medium Stiff	4 - 8
Dense	30 - 50	Stiff	8 - 15
Very Dense	Over 50	Very Stiff	15 - 30
N=Sum of Second and Third 6" Blow Counts		Hard	Over 30

Type of Drill Rig: Truck / Diedrich D-50
Casing Type: HW Size:4" Depth: 24'
Hammer Weight: 300Lbs. Fall: 30"
Signs: Cones: Arrow-Board:
Sampler Type: SS Size: 1 3/8"
Automatic Hammer Weight:
Safety Hammer Weight: 140Lbs.
Donut Hammer Weight:
Fall: 30"
Core Barrel Type: Size:

Terms Used for Second Entry of Descriptions: and = 40-50%, some = 10-40%, trace = 10% or less

---

massDOT Highway

NOBIS ENGINEERING, INC.
585 Middlesex Street
Lowell, MA 01851

Phone: (978) 683-0891
Fax: (978) 683-0966
www.nobisengineering.com

Boring No. B-5
Not to scale

City/Town: Acton & Maynard | Bridge: Winter Street | Project File No: 604531 | Contract No: 68386
Project: Assabet River Rail Trail | Date Started: July 8, 2014 | Total Hours:
Groundwater Depth: 11.3' | Date & Time: 7/9/2014 2:55 PM | Date Completed: July 9, 2014 | 5
Coordinates: N 2980759.22 E 665584.35 | Driller's Name: Mike D'Ambrosia | Helper's Name:
Ground Elevation: ± 186 | Inspector's Name: Patrick Clarke | Driller's Company: New Hampshire Boring, Inc.

Sample Number	Depth Range (Feet)	Blow Counts per 6 Inches	Coring Times Minute Per Foot			Recovery Inches	Field Description	Strata Changes
S-1	0' - 2'	12	11	7	6	12"	S-1A (6"): Moist, dense, dark brown to black, FINE TO COARSE SAND AND FINE TO MEDIUM GRAVEL, some silt, some asphalt fragments (FILL).	
S-2	2' - 4'	12	4	3	4	8"	S-1B (6"): Moist, medium dense, dark brown, FINE TO COARSE SAND, some silt, some medium gravel (FILL).	
S-3	4' - 6'	9	4	4	3	8"	S-2: Moist, loose, brown, FINE TO COARSE SAND AND SILT, some fine to medium gravel (FILL).	
							S-3: Moist, loose, dark gray to black, SILT, some medium gravel (FILL).	
S-4	6' - 8'	4	5	4	2	5"	S-4: Wet, loose, light brown, FINE TO COARSE SAND AND SILT, some fine to medium gravel, trace roots (FILL).	
								8'
S-5	8' - 10'	9	7	9	7	11"	S-5a (3"): Wet, medium dense, dark brown, FINE TO COARSE SAND, trace root fibers, trace pockets of organic silt.	
								10'
S-6	10' - 12'	5	71	17	10	10"	S-5B (8"): Wet, medium dense, brown, FINE TO COARSE SAND AND SILT.	
							S-6: Wet, very dense, gray, MEDIUM GRAVEL, some fine to coarse sand, some silt.	
							Increased drilling resistance at 14' indicating probable strata change.	14'
S-7	15' - 17'	15	22	21	17	14"	S-7: Wet, dense, gray, FINE TO MEDIUM SAND, some silt.	
S-8	20'-22'	19	14	9	7	2"	S-8: Wet, medium dense, gray, FINE TO COARSE SAND, some silt, some fine to medium gravel.	
S-9	22'-24'	7	7	5	5	8"	S-9: Wet, medium dense, gray, SILT, some fine sand, trace medium gravel.	
							Increased drilling resistance at 27'.	
S-9	29'-31'	16	9	14	16	6 "	S-10: Wet, medium dense, gray, FINE TO COARSE SAND AND SILT, some fine to medium gravel.	
								31.5'
							Bedrock fragments observed in drill cuttings from 31.5' to 32.5'.	
							Bottom of Exploration = 32.5'	

Notes:
1. Ground surface elevation should be considered approximate.
2. Borehole backfilled with drill cuttings.

Protective Device - Stand: Box:
Well Depth: Solid Pipe:
Stick Up Pipe: Screen Pipe:

Penetration Resistance (N) Guide:

Cohesionless Soils (Sands, Gravels)		Cohesive Soils (Silts, Clays)	
Relative Density	Penetration Resistance	Consistency	Penetration Resistance
Very Loose	0 - 4	Very Soft	0 - 2
Loose	4 - 10	Soft	2 - 4
Medium Dense	10 - 30	Medium Stiff	4 - 8
Dense	30 - 50	Stiff	8 - 15
Very Dense	Over 50	Very Stiff	15 - 30
N=Sum of Second and Third 6" Blow Counts		Hard	Over 30

Type of Drill Rig: Truck / Acker AD2
Casing Type: HW Size:4" Depth: 30'
Hammer Weight: 300Lbs. Fall: 30"
Signs: Cones: Arrow-Board:
Sampler Type: SS Size: 1 3/8"
Automatic Hammer Weight:
Safety Hammer Weight: 140Lbs.
Donut Hammer Weight:
Fall: 30"
Core Barrel Type: Size:

Terms Used for Second Entry of Descriptions: and = 40-50%, some = 10-40%, trace = 10% or less

---

massDOT Highway

NOBIS ENGINEERING, INC.
585 Middlesex Street
Lowell, MA 01851

Phone: (978) 683-0891
Fax: (978) 683-0966
www.nobisengineering.com

Boring No. B-6
Not to scale

City/Town: Acton & Maynard | Bridge: Winter Street | Project File No: 604531 | Contract No: 68386
Project: Assabet River Rail Trail | Date Started: July 9, 2014 | Total Hours:
Groundwater Depth: NR | Date & Time: N/A | Date Completed: July 9, 2014 | 5
Coordinates: N 2980828.29 E 665721.14 | Driller's Name: Mike D'Ambrosia | Helper's Name:
Ground Elevation: ± 186.5 | Inspector's Name: Patrick Clarke | Driller's Company: New Hampshire Boring, Inc.

Sample Number	Depth Range (Feet)	Blow Counts per 6 Inches	Coring Times Minute Per Foot			Recovery Inches	Field Description	Strata Changes
							ASPHALT	0.3'
S-1	1' - 3'	21	8	8	22	7"	S-1: Dry, medium dense, brown, FINE TO COARSE SAND, some silt, some medium gravel (FILL).	
S-2	3' - 5'	10	8	6	5	15"	S-2: Dry, medium dense, brown, FINE TO COARSE SAND, some fine to medium gravel, some silt, trace asphalt particles and fragments (FILL).	
S-3	5' - 7'	6	7	7	13	3"	S-3: Dry, medium dense, brown, FINE TO MEDIUM GRAVEL AND FINE TO COARSE SAND, some silt, trace asphalt particles and fragments (FILL).	7'
S-4	7' - 9'	10	4	4	15	16"	S-4: Moist, loose, dark brown, FINE TO COARSE SAND, some organic silt, trace root fibers (SAND WITH ORGANICS).	
								9'
S-5	9' - 11'	31	16	17	12	10"	S-5: Wet, dense, brown, FINE TO COARSE SAND, some silt, some fine to medium gravel.	
S-6	15' - 17'	23	16	11	12	10"	S-6: Wet, medium dense, gray, SILT AND FINE TO MEDIUM SAND, trace medium gravel.	
								20'
S-7	20'-22'	13	12	15	15	7"	S-7: Wet, medium dense, gray, FINE TO MEDIUM GRAVEL AND FINE TO COARSE SAND, some silt, rock fragments in split spoon tip.	
								23'
							Drill action and cuttings indicate weathered bedrock from 23' to 25'.	
S-8	25'-25'	50/0"				0"	S-8: No Recovery.	25'
							Bottom of Exploration = 25'	

Notes:
1. NR = Not Recorded.
2. Ground surface elevation should be considered approximate.
3. Borehole backfilled with drill cuttings.

Protective Device - Stand: Box:
Well Depth: Solid Pipe:
Stick Up Pipe: Screen Pipe:

Penetration Resistance (N) Guide:

Cohesionless Soils (Sands, Gravels)		Cohesive Soils (Silts, Clays)	
Relative Density	Penetration Resistance	Consistency	Penetration Resistance
Very Loose	0 - 4	Very Soft	0 - 2
Loose	4 - 10	Soft	2 - 4
Medium Dense	10 - 30	Medium Stiff	4 - 8
Dense	30 - 50	Stiff	8 - 15
Very Dense	Over 50	Very Stiff	15 - 30
N=Sum of Second and Third 6" Blow Counts		Hard	Over 30

Type of Drill Rig: Truck / Acker AD2
Casing Type: HW Size:4" Depth: 25'
Hammer Weight: 300Lbs. Fall: 30"
Signs: Cones: Arrow-Board:
Sampler Type: SS Size: 1 3/8"
Automatic Hammer Weight:
Safety Hammer Weight: 140Lbs.
Donut Hammer Weight:
Fall: 30"
Core Barrel Type: Size:

Terms Used for Second Entry of Descriptions: and = 40-50%, some = 10-40%, trace = 10% or less

---

massDOT Highway

NOBIS ENGINEERING, INC.
585 Middlesex Street
Lowell, MA 01851

Phone: (978) 683-0891
Fax: (978) 683-0966
www.nobisengineering.com

Boring No. BB-2
Not to scale

City/Town: Acton & Maynard | Bridge: Pedestrian Bridge, No. M-10-012 | Project File No: 604531 | Contract No: 68386
Project: Assabet River Rail Trail | Date Started: August 20, 2014 | Total Hours:
Groundwater Depth: N/E | Date & Time: N/A | Date Completed: August 20, 2014 | 1
Coordinates: N 2982524.42 E 668096.84 | Driller's Name: Kenneth Smith | Helper's Name: Matt
Ground Elevation: ± 160.0 | Inspector's Name: Patrick Clarke | Driller's Company: New Hampshire Boring, Inc.

Sample Number	Depth Range (Feet)	Blow Counts per 6 Inches	Coring Times Minute Per Foot			Recovery Inches	Field Description	Strata Changes
S-1	0' - 2'	4	12	19	30	14"	S-1A (10"): Dry, dense, brown, FINE TO COARSE SAND, some fine to coarse gravel, some silt, trace fine gravel, trace roots. (TOPSOIL).	10"
S-2	2' - 2'11"	60	100/5"			5"	S-1B (4"): Dry, dense, light brown, FINE TO COARSE SAND AND FINE TO COARSE GRAVEL, trace silt, trace asphalt fragments (FILL).	
							S-2: Dry, very dense, light brown, FINE TO COARSE GRAVEL AND FINE TO COARSE SAND, some silt (FILL).	
							Heavy drilling resistance (grinding) observed between 3' and 3'4".	
							Bottom of Exploration = 3'5"	

Notes:
1. N/E = Not Encountered.
2. Ground surface elevation should be considered approximate.
3. Nearest existing bridge abutment top of footing measured to be approximately 9 feet below existing bridge deck. Assabet River is approximately 9'3" below existing bridge deck.
4. Bedrock outcrops observed at river bottom.
5. Borehole backfilled with drill cuttings and sand.

Protective Device - Stand: Box:
Well Depth: Solid Pipe:
Stick Up Pipe: Screen Pipe:

Penetration Resistance (N) Guide:

Cohesionless Soils (Sands, Gravels)		Cohesive Soils (Silts, Clays)	
Relative Density	Penetration Resistance	Consistency	Penetration Resistance
Very Loose	0 - 4	Very Soft	0 - 2
Loose	4 - 10	Soft	2 - 4
Medium Dense	10 - 30	Medium Stiff	4 - 8
Dense	30 - 50	Stiff	8 - 15
Very Dense	Over 50	Very Stiff	15 - 30
N=Sum of Second and Third 6" Blow Counts		Hard	Over 30

Type of Drill Rig: Acker Soil Scout
Casing Type: HW Size: 4" Depth: 2'
Hammer Weight: 300Lbs. Fall: 30"
Signs: Cones: Arrow-Board:
Sampler Type: SS Size: 1 3/8"
Automatic Hammer Weight:
Safety Hammer Weight: 140Lbs.
Donut Hammer Weight:
Fall: 30"
Core Barrel Type: NX Size: 2.15"

Terms Used for Second Entry of Descriptions: and = 40-50%, some = 10-40%, trace = 10% or less

---

massDOT Highway

NOBIS ENGINEERING, INC.
585 Middlesex Street
Lowell, MA 01851

Phone: (978) 683-0891
Fax: (978) 683-0966
www.nobisengineering.com

Boring No. BB-2A
Not to scale

City/Town: Acton & Maynard | Bridge: Pedestrian Bridge, No. M-10-012 | Project File No: 604531 | Contract No: 68386
Project: Assabet River Rail Trail | Date Started: August 20, 2014 | Total Hours:
Groundwater Depth: 8'6" | Date & Time: 8/20/2014 3:20 pm | Date Completed: August 20, 2014 | 7
Coordinates: N 2982521.99 E 668093.34 | Driller's Name: Kenneth Smith | Helper's Name: Matt
Ground Elevation: ± 160.0 | Inspector's Name: Patrick Clarke | Driller's Company: New Hampshire Boring, Inc.

Sample Number	Depth Range (Feet)	Blow Counts per 6 Inches	Coring Times Minute Per Foot			Recovery Inches	Field Description	Strata Changes
							Casing advanced to 4' below ground surface and washed out for sampling. Subsurface conditions assumed to be similar to those encountered in Boring BB-2.	
S-1	4' - 6'	6	9	16	15	2"	S-1: Wet, medium dense, brown, FINE TO COARSE GRAVEL, trace fine to coarse sand, trace silt, trace wood fragments (FILL).	
S-2	6' - 8'	10	9	6	10	4"	S-2: Wet, medium dense, brown, FINE TO COARSE GRAVEL, some fine to coarse sand, some silt, trace roots (FILL).	
S-3	8' - 8'4"	100/3"				3"	S-3: Wet, very dense, brown, FINE TO COARSE SAND, some silt, some fine gravel (FILL).	8'6"
C-1	8'6" - 11'6"	5.8	8.8	13			Increased drilling resistance (grinding) observed between 8 and 8'6". Top of BEDROCK at 8'6"	
							C-1 Hard, slightly to moderately weathered, extremely to slightly fractured, gray with brown staining, medium grained, GNEISS, very close to close, low to high angle open and closed joints. Percent Recovery = 100%, RQD = 14%.	
C-2	11'6" - 14'6"	6.8	7.8	15.3			C-2 Very hard, slightly weathered to fresh, moderately fractured to sound, gray, medium grained, GNEISS, very close to moderately close, low angle to moderately dipping open and closed joints. Percent Recovery = 100%, RQD = 85%.	
							Bottom of Exploration = 14'6"	

Notes:
1. Ground surface elevation should be considered approximate.
2. Nearest existing bridge abutment top of footing measured to be approximately 9 feet below existing bridge deck. Assabet River is approximately 9'3" below existing bridge deck.
3. Bedrock outcrops observed at river bottom.
4. Borehole backfilled with drill cuttings and sand.

Protective Device - Stand: Box:
Well Depth: Solid Pipe:
Stick Up Pipe: Screen Pipe:

Penetration Resistance (N) Guide:

Cohesionless Soils (Sands, Gravels)		Cohesive Soils (Silts, Clays)	
Relative Density	Penetration Resistance	Consistency	Penetration Resistance
Very Loose	0 - 4	Very Soft	0 - 2
Loose	4 - 10	Soft	2 - 4
Medium Dense	10 - 30	Medium Stiff	4 - 8
Dense	30 - 50	Stiff	8 - 15
Very Dense	Over 50	Very Stiff	15 - 30
N=Sum of Second and Third 6" Blow Counts		Hard	Over 30

Type of Drill Rig: Acker Soil Scout
Casing Type: HW Size: 4" Depth: 8'
Hammer Weight: 300Lbs. Fall: 30"
Signs: Cones: Arrow-Board:
Sampler Type: SS Size: 1 3/8"
Automatic Hammer Weight:
Safety Hammer Weight: 140Lbs.
Donut Hammer Weight:
Fall: 30"
Core Barrel Type: NX Size: 2.15"

Terms Used for Second Entry of Descriptions: and = 40-50%, some = 10-40%, trace = 10% or less

---

TEST PIT LOG

Nobis
Engineering a Sustainable Future

PROJECT			
Assabet River Rail Trail		TEST PIT NO.	TP-1
Pedestrian Bridge Over Assabet River		SHEET	1 of 2
Maynard, Massachusetts		FILE NO.	87860.01
		CHKD BY	J. Kalafatis

Engineer	Patrick Clarke	Make	Caterpillar	Ground El.	±160.0
Contractor	Crawford Drilling	Model	305C	Datum	NAVD88
Operator	Alfred Alan	Capacity	1/4 CY	Time Start	7:45
Weather	Rain, 60's	Reach	10'	Date	10/15/2014

Depth Below Grade (ft)	Strata Change & Water Level	Subsurface Description	Excavation Effort	Boulder Qty/Class	Remarks
1	4" TOPSOIL 6" SUBSOIL	4": Brown, fine to medium SAND, little Silt, very few roots, dry (TOPSOIL). 6": Light brown, fine to medium SAND, little Silt, few tree roots, dry (SUBSOIL).	M		Tree Roots
2	1.5' FILL (2' from east face of existing abutment)	4' 3' G-1: Light brown, fine SAND, little fine to coarse Gravel, trace Silt, very few cobbles, dry (FILL).	M (D on Granite)	-	Granite Blocks
3		Buried Asphalt (6") 2'			Asphalt
4				1A	
5		GRANITE BLOCKS / G-2: Light brown, fine to medium SAND, little fine to coarse Gravel, little Silt, several boulders, few cobbles, dry (FILL).	M	2A, 1C	-
6					
7				2A	
8		Bottom of exploration on bedrock at depth of 7.5'			
9					
10					
11					
12					
13					
14					
15					

Notes: 1) Water not encountered in test pit. Water level in nearby river measured to be approximately 9'-10" below the existing bridge deck.
2) Test pit backfilled with native soil and reseeded with grass seed at ground surface.

WATER SYMBOLS
▼ Groundwater
▽ Estimated Seasonal High Groundwater

18.5' × 4' — N

BOULDER	CLASS
12" - 24"	A
24" - 36"	B
>36"	C

PROPORTIONS USED	
0-10%	Trace
10-20%	Little
20-35%	Some
35-50%	And

EXCAVATION EFFORT
E = Easy
M = Moderate
D = Difficult

604531_HD(KEY).DWG Plotted on 8-Oct-2015 12:53 PM

MAYNARD & ACTON
ASSABET RIVER RAIL TRAIL

STATE	FED. AID PROJ. NO.	SHEET NO.	TOTAL SHEETS
MA	CMAQ/STP-TE-002S(836)	3	230
PROJECT FILE NO.	604531		

KEY PLAN & BORING LOCATIONS

SHEET REFERENCE:	1	2	3	4	5	6	7	8	9	10	11	12	13	14	15
Drawing Title:	Drawing Number:														
CONSTRUCTION BASELINE TIES	14	14	15	15	16	16	18	18	17	17	19	20	20	21	21
CONSTRUCTION PLANS & PROFILES	31	32	33	34	35	36-37	38	39	40-41	42	43	44	45	46	47
CURB TIE & GRADING PLANS	67	-	-	67	-	68	-	-	69	70	71	72	72	-	73
TRAFFIC SIGN & PAVEMENT MARKINGS	77	77	78	78	79	80	81	81	82	83	84	85	86	87	88
LANDSCAPING PLANS	106	106	107	107	108	108	109	109	110	110	111	111	112	112	113
WETLAND REPLICATION PLANS	-	-	123	-	-	-	-	-	-	-	-	-	-	-	-
BRIDGE PLANS	-	-	-	-	-	-	-	-	-	-	-	138-143	-	-	-

- BORING/TEST PIT LOCATION
B/BB-# = BORING NUMBER
(SEE BRIDGE PLANS FOR BRIDGE BORING LOGS)
TP-# = TEST PIT NUMBER

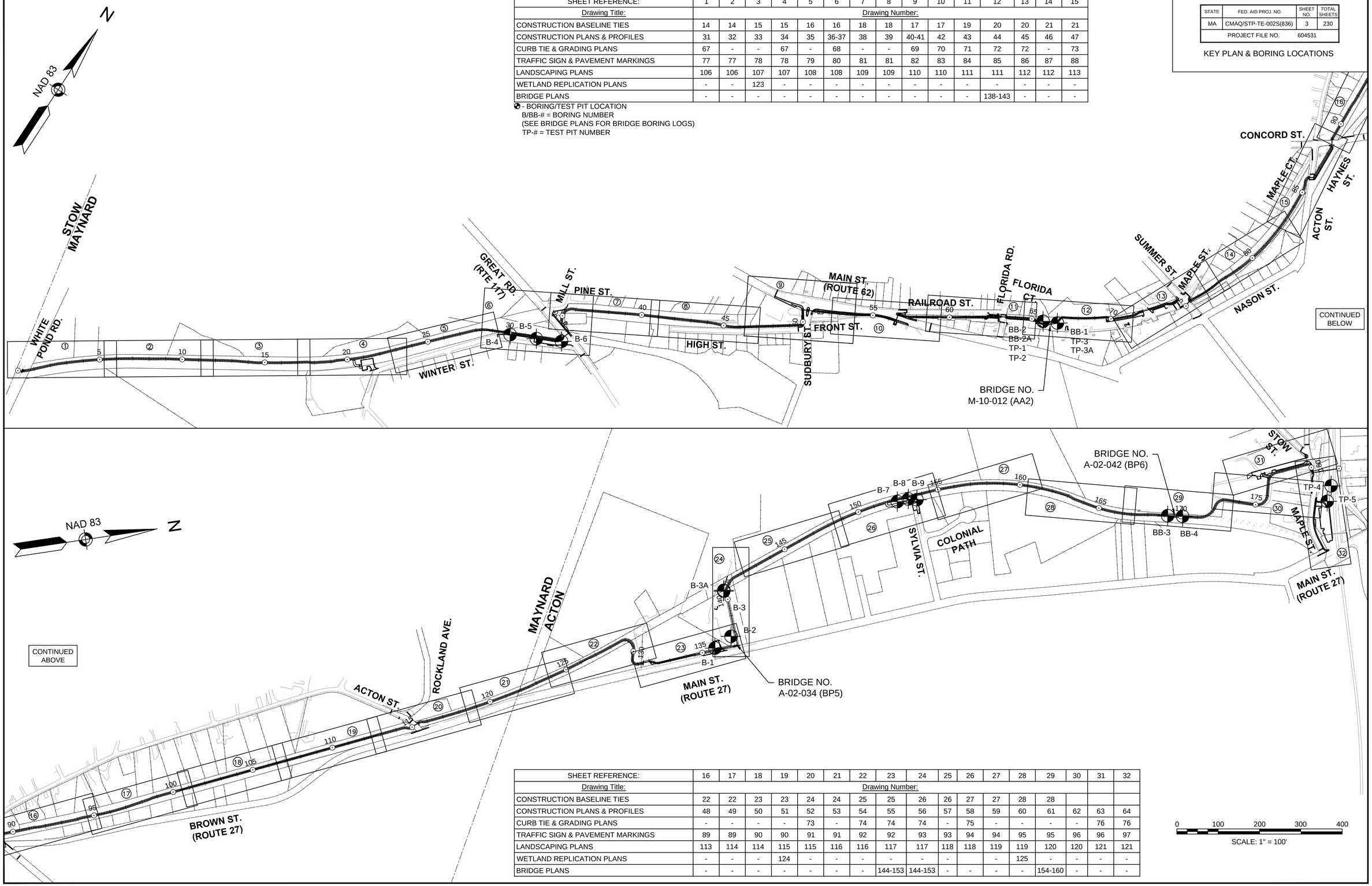

SHEET REFERENCE:	16	17	18	19	20	21	22	23	24	25	26	27	28	29	30	31	32
Drawing Title:	Drawing Number:																
CONSTRUCTION BASELINE TIES	22	22	23	23	24	24	25	25	26	26	27	27	28	28			
CONSTRUCTION PLANS & PROFILES	48	49	50	51	52	53	54	55	56	57	58	59	60	61	62	63	64
CURB TIE & GRADING PLANS	-	-	-	-	73	-	74	74	74	-	75	-	-	-	-	76	76
TRAFFIC SIGN & PAVEMENT MARKINGS	89	89	90	90	91	91	92	92	93	93	94	94	95	95	96	96	97
LANDSCAPING PLANS	113	114	114	115	115	116	116	117	117	118	118	119	119	120	120	121	121
WETLAND REPLICATION PLANS	-	-	-	124	-	-	-	-	-	-		-	125	-	-	-	-
BRIDGE PLANS	-	-	-	-	-	-	-	144-153	144-153	-	-	-	-	154-160	-	-	-

604531_HD(KEY).DWG Plotted on 8-Oct-2015 12:53 PM

GENERAL SYMBOLS

EXISTING	PROPOSED	DESCRIPTION
JB	JB	JERSEY BARRIER ON BRIDGE OR JERSEY BARRIER
CB	CB	CATCH BASIN
		CATCH BASIN CURB INLET
FP	FP	FLAG POLE
GP	GP	GAS PUMP
MB	MB	MAIL BOX
		POST SQUARE
		POST CIRCULAR
WELL	WELL	WELL
EHH	EHH	ELECTRIC HANDHOLE
		FENCE GATE POST
GG	GG	GAS GATE
BHL #	BHL #	BORING HOLE
MW #	MW #	MONITORING WELL
TP #	TP #	TEST PIT
		HYDRANT
		LIGHT POLE
CO.BD.		COUNTY BOUND
		GPS POINT
		CABLE MANHOLE
		DRAINAGE MANHOLE
		ELECTRIC MANHOLE
		GAS MANHOLE
		MISC MANHOLE
		SEWER MANHOLE
		TELEPHONE MANHOLE
		WATER MANHOLE
MHB	MHB	MASSACHUSETTS HIGHWAY BOUND
MON		MONUMENT
SB		STONE BOUND
TB		TOWN OR CITY BOUND
		TRAVERSE OR TRIANGULATION STATION
TPL or GUY	TPL or GUY	TROLLEY POLE OR GUY POLE
HTP		TRANSMISSION POLE
UFB	UFB	UTILITY POLE W/ FIREBOX
UPDL	UPDL	UTILITY POLE WITH DOUBLE LIGHT
ULT	ULT	UTILITY POLE W / 1 LIGHT
UPL	UPL	UTILITY POLE
		BUSH
SIZE & TYPE		TREE
		TREE (UNKNOWN SIZE)
		STUMP
		SWAMP / MARSH
WG	WG	WATER GATE
PM	PM	PARKING METER
		BIKE RACK
		OVERHEAD CABLE/WIRE
		CURBING
99 / 100		CONTOURS
		UNDERGROUND DRAIN PIPE (DOUBLE LINE 24 INCH AND OVER)
		UNDERGROUND ELECTRIC DUCT (DOUBLE LINE 24 INCH AND OVER)
		UNDERGROUND GAS MAIN (DOUBLE LINE 24 INCH AND OVER)
		UNDERGROUND SEWER MAIN (DOUBLE LINE 24 INCH AND OVER)
		UNDERGROUND TELEPHONE DUCT (DOUBLE LINE 24 INCH AND OVER)
		UNDERGROUND WATER MAIN (DOUBLE LINE 24 INCH AND OVER)
		BALANCE STONE WALL
		GUARD RAIL - STEEL POSTS
		GUARD RAIL - WOOD POSTS
		CHAIN LINK OR METAL FENCE
		WOOD FENCE
		COMPOST FILTER TUBES
		TREE LINE OR LIMIT OF CLEARING AND GRUBBING
		SAWCUT LINE
		TOP OR BOTTOM OF SLOPE
		LIMIT OF EDGE OF PAVEMENT OR COLD PLANE AND OVERLAY
		BANK OF RIVER OR STREAM
		BORDER OF WETLAND
		100 FT WETLAND BUFFER
		200 FT RIVERFRONT BUFFER
		STATE HIGHWAY LAYOUT
		TOWN OR CITY LAYOUT
		COUNTY LAYOUT
		RAILROAD SIDELINE
		TOWN OR CITY BOUNDARY LINE
		PROPERTY LINE OR APPROXIMATE PROPERTY LINE
		EASEMENT

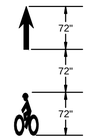

BIKE LANE MARKING DETAIL
NOT TO SCALE

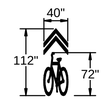

SHARED LANE "SHARROW" MARKING DETAIL
NOT TO SCALE

PAVEMENT MARKINGS SYMBOLS

EXISTING	PROPOSED	DESCRIPTION
		PAVEMENT ARROW - WHITE
ONLY	ONLY	LEGEND "ONLY" - WHITE
	SL	STOP LINE
	CW	CROSSWALK
	SWL	SOLID WHITE LINE
	SYL	SOLID YELLOW LINE
	BWL	BROKEN WHITE LINE
	BYL	BROKEN YELLOW LINE
	DWL	DOTTED WHITE LINE
	DYL	DOTTED YELLOW LINE
	DWLEx	DOTTED WHITE LINE EXTENSION
	DYLEx	DOTTED YELLOW LINE EXTENSION
	DBWL	DOUBLE WHITE LINE
	DBYL	DOUBLE YELLOW LINE

PAVEMENT MARKING WIDTH SHALL BE 6"

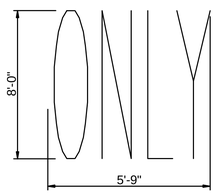

NOTE:
ARROW &
ONLY=APPROX.
46 SQ.FT.

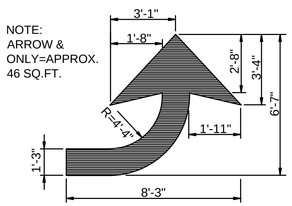

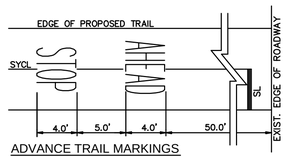

ADVANCE TRAIL MARKINGS
AT ROADWAY XING
NOT TO SCALE

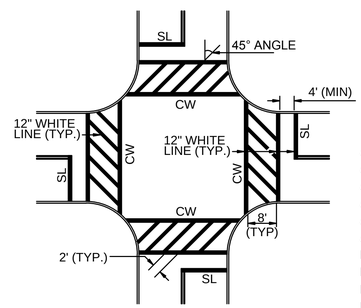

TYPICAL CROSSWALK MARKINGS
NOT TO SCALE

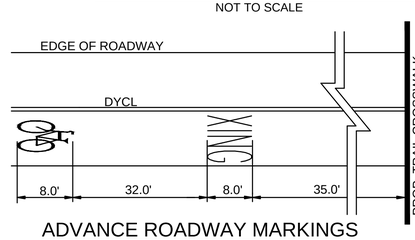

ADVANCE ROADWAY MARKINGS
AT TRAIL XING
NOT TO SCALE

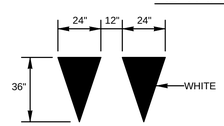

YIELD LINE MARKINGS
NOT TO SCALE

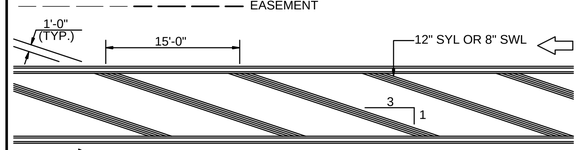

GORE AREA DETAIL
NOT TO SCALE

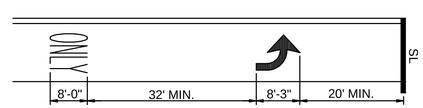

ARROW & ONLY DETAIL
NOT TO SCALE

GENERAL NOTES

1. EXISTING CONDITIONS AND TOPOGRAPHICAL SURVEY PROVIDED BY THOMAS LAND SURVEYORS & ENGINEERING CONSULTANTS, INC., MARCH 23, 2006 AND UPDATED BY SUPPLEMENTAL SURVEY IN 2013-2015. HORIZONTAL DATUM IS BASED ON NAD83 MASSACHUSETTS STATE PLANE, MAINLAND ZONE - 2001. VERTICAL DATUM IS BASED ON NAVD88.
2. THE LOCATIONS OF EXISTING UNDERGROUND UTILITIES ARE SHOWN IN AN APPROXIMATE WAY ONLY AND HAVE NOT BEEN INDEPENDENTLY VERIFIED BY THE OWNER OR ITS REPRESENTATIVE. THE CONTRACTOR SHALL DETERMINE THE EXACT LOCATION OF ALL EXISTING UTILITIES BEFORE COMMENCING WORK, AND AGREES TO BE FULLY RESPONSIBLE FOR ANY AND ALL DAMAGES WHICH MIGHT BE OCCASIONED BY THE CONTRACTOR'S FAILURE TO LOCATE EXACTLY AND TO PRESERVE ANY AND ALL UNDERGROUND UTILITIES. CALL "DIG-SAFE" 1-888-DIGSAFE (344-7233) AT LEAST 72 HOURS BEFORE COMMENCING CONSTRUCTION.
3. WHERE AN EXISTING UNDERGROUND UTILITY IS FOUND TO CONFLICT WITH THE PROPOSED WORK, THE LOCATION, ELEVATION AND SIZE OF THE UTILITY SHALL BE ACCURATELY DETERMINED WITHOUT DELAY BY THE CONTRACTOR, AND THE INFORMATION FURNISHED TO THE ENGINEER FOR RESOLUTION OF THE CONFLICT.
4. AREAS OUTSIDE THE LIMITS OF PROPOSED WORK DISTURBED BY THE CONTRACTOR'S OPERATIONS SHALL BE RESTORED BY THE CONTRACTOR TO THEIR ORIGINAL CONDITION AT THE CONTRACTOR'S EXPENSE.
5. THE TERM "PROPOSED" (PROP.) MEANS WORK TO BE CONSTRUCTED USING NEW MATERIALS, OR, WHERE APPLICABLE, RE-USING EXISTING MATERIALS IDENTIFIED AS "REMOVE & RESET" (R&R).
6. ALL EXISTING SIGNS WITHIN THE PROJECT LIMITS SHALL BE RETAINED UNLESS NOTED OTHERWISE.
7. ALL PROPOSED PAVEMENT MARKINGS SHALL BE THERMOPLASTIC.
8. ALL EXISTING STATE, COUNTY, CITY AND TOWN LOCATION LINES AND PRIVATE PROPERTY LINES HAVE BEEN ESTABLISHED FROM AVAILABLE INFORMATION AND THEIR EXACT LOCATIONS ARE NOT GUARANTEED.
9. ALL TRANSVERSE JOINTS, AND ALL LONGITUDINAL JOINTS BETWEEN NEW SURFACE PAVEMENT AND EXISTING SURFACE PAVEMENT TO REMAIN SHALL BE COATED WITH A HOT MIX ASPHALT JOINT SEALANT MEETING SPECIAL PROVISIONS ITEM 453.
10. ALL DISTURBED AREAS NOT DESIGNATED TO BE PAVED SHALL HAVE LOAM BORROW PLACED AND SEEDED. THE LOAM BORROW SHALL HAVE A MINIMUM DEPTH OF 4 INCHES AND SHALL BE PLACED FLUSH WITH THE TOP OF THE ADJACENT CURB, EDGING, BERM OR PAVEMENT SURFACE.
11. THE LIMIT OF WORK AREA SHALL BE THE STREET RIGHT OF WAY UNLESS SHOWN OTHERWISE.
12. ALL PROPERTY LINES BETWEEN ABUTTERS ARE APPROXIMATE ONLY.
13. PRIOR TO THE START OF ANY NEW UTILITY WORK, ALL ELEVATIONS OF EXISTING UTILITIES IN THOSE AREAS ARE TO BE VERIFIED. THE ENGINEER IS TO BE NOTIFIED IMMEDIATELY SHOULD ANY DISCREPANCIES OCCUR.
14. ALL CASTINGS SHALL BE SET FLUSH WITH FINISHED GRADE.
15. ALL PUBLICLY OWNED GATE BOXES, SERVICE BOXES, MANHOLE FRAMES AND COVERS SHALL BE ADJUSTED TO GRADE BY THE CONTRACTOR.
16. ALL NEW SIDEWALKS AND DRIVEWAY GRADES SHALL MATCH EXISTING GRADES AT BACK OF SIDEWALK LINE UNLESS SHOWN OTHERWISE ON THE PLANS AND CROSS-SECTIONS.
17. THE CONTRACTOR SHALL TAKE EVERY PRECAUTION TO PROTECT ALL EXISTING TREES AND ROOTS THAT ARE NOT DESIGNATED FOR REMOVAL.
18. CONTRACTOR TO CONTACT ENGINEER PRIOR TO INSTALLATION OF BOUNDS FOR FINAL LOCATIONS.
19. DRAINAGE ELEVATIONS ARE PROVIDED FOR DESIGN PURPOSES ONLY. THE CONTRACTOR SHALL VERIFY BY TEST PIT, THE LOCATIONS OF EXISTING UTILITIES WHICH MAY CONFLICT WITH THE PROPOSED DRAINAGE DESIGN. ANY FIELD ADJUSTMENTS REQUIRED WILL BE MADE AS APPROVED OR DIRECTED BY THE ENGINEER. ONLY AFTER THE CONTRACTOR VERIFIES ELEVATIONS FOR THE CONSTRUCTABILITY OF THE DRAINAGE SYSTEM SHALL ANY STRUCTURES BE ORDERED. ANY FIELD ADJUSTMENTS TO LINE & GRADE UP TO A DEPTH OF 5' SHALL BE INCLUDED IN THE COST OF THE PIPE. PIPE EXCAVATION GREATER THAN 5' WILL BE PAID UNDER CLASS B TRENCH EXCAVATION.

MAYNARD & ACTON
ASSABET RIVER RAIL TRAIL

STATE	FED. AID PROJ. NO.	SHEET NO.	TOTAL SHEETS
MA	CMAQ/STP-TE-002S(836)	2	230
PROJECT FILE NO.	604531		

LEGEND & ABBREVIATIONS

GENERAL ABBREVIATIONS

AADT	ANNUAL AVERAGE DAILY TRAFFIC	EXC	EXCAVATION	PVI	POINT OF VERTICAL INTERSECTION
ABAN	ABANDON	F&C	FRAME AND COVER	PVT	POINT OF VERTICAL TANGENCY
ADJ	ADJUST	F&G	FRAME AND GRATE	PVMT	PAVEMENT
APPROX.	APPROXIMATE	FDN.	FOUNDATION	PWW	PAVED WATER WAY
A.C.	ASPHALT CONCRETE	FES	FLARED END STRUCTURE	R	RADIUS OF CURVATURE
ACCM PIPE	ASPHALT COATED CORRUGATED METAL PIPE	FLDSTN	FIELDSTONE	R&D	REMOVE AND DISPOSE
BIT.	BITUMINOUS	GAR	GARAGE	RCP	REINFORCED CONCRETE PIPE
BC	BOTTOM OF CURB	GD	GROUND	RD	ROAD
BD.	BOUND	GG	GAS GATE	RDWY	ROADWAY
BL	BASELINE	GI	GUTTER INLET	REM	REMOVE
BLDG	BUILDING	GIP	GALVANIZED IRON PIPE	RET	RETAIN
BLSF	BORDERING LAND SUBJECT TO FLOODING	GRAN	GRANITE	RET WALL	RETAINING WALL
BM	BENCHMARK	GRAV	GRAVEL	ROW	RIGHT OF WAY
BO	BY OTHERS	GRD	GUARD	RR	RAILROAD
BOS	BOTTOM OF SLOPE	HDW	HEADWALL	R&R	REMOVE AND RESET
BR.	BRIDGE	HMA	HOT MIX ASPHALT	R&S	REMOVE AND STACK
BVW	BORDERING VEGETATED WETLAND	HOR	HORIZONTAL	RT	RIGHT
CB	CATCH BASIN	HYD	HYDRANT	SB	STONE BOUND
CBCI	CATCH BASIN WITH CURB INLET	INV	INVERT	SHLD	SHOULDER
CC	CEMENT CONCRETE	JCT	JUNCTION	SMH	SEWER MANHOLE
CCM	CEMENT CONCRETE MASONRY	L	LENGTH OF CURVE	ST	STREET
CEM	CEMENT	LB	LEACH BASIN	STA	STATION
CI	CURB INLET	LP	LIGHT POLE	SSD	STOPPING SIGHT DISTANCE
CIP	CAST IRON PIPE	LT	LEFT	SHLO	STATE HIGHWAY LAYOUT LINE
CLF	CHAIN LINK FENCE	MAX	MAXIMUM	SW	SIDEWALK
CL	CENTERLINE	MB	MAILBOX	T	TANGENT DISTANCE OF CURVE/TRUCK %
CMP	CORRUGATED METAL PIPE	MH	MANHOLE	TAN	TANGENT
CSP	CORRUGATED STEEL PIPE	MHB	MASSACHUSETTS HIGHWAY BOUND	TEMP	TEMPORARY
CO.	COUNTY	MIN	MINIMUM	TC	TOP OF CURB
CONC	CONCRETE	NIC	NOT IN CONTRACT	TOS	TOP OF SLOPE
CONT	CONTINUOUS	NO.	NUMBER	TYP	TYPICAL
CONST	CONSTRUCTION	PC	POINT OF CURVATURE	UP	UTILITY POLE
CR GR	CROWN GRADE	PCC	POINT OF COMPOUND CURVATURE	UPL	UTILITY POLE WITH LIGHT
DHV	DESIGN HOURLY VOLUME	P.G.L.	PROFILE GRADE LINE	VAR	VARIES/VARIABLE
DI	DROP INLET	PI	POINT OF INTERSECTION	VERT	VERTICAL
DIA	DIAMETER	POC	POINT ON CURVE	VC	VERTICAL CURVE
DIP	DUCTILE IRON PIPE	POT	POINT ON TANGENT	VGC	VERTICAL GRANITE CURB
DW	STEADY DON'T WALK - PORTLAND ORANGE	PRC	POINT OF REVERSE CURVATURE	WCR	WHEEL CHAIR RAMP
DWY	DRIVEWAY	PROJ	PROJECT	WG	WATER GATE
ELEV (or EL.)	ELEVATION	PROP	PROPOSED	WM	WATER METER/WATER MAIN
EMB	EMBANKMENT	PSB	PLANTABLE SOIL BORROW	X-SECT	CROSS SECTION
EOP	EDGE OF PAVEMENT	PT	POINT OF TANGENCY		
EXIST (or EX)	EXISTING	PVC	POINT OF VERTICAL CURVATURE		

604531_HD(CS&LE).DWG Plotted on 8-Oct-2015 12:52 PM